(Budweiser) BE5EA Block Diagram

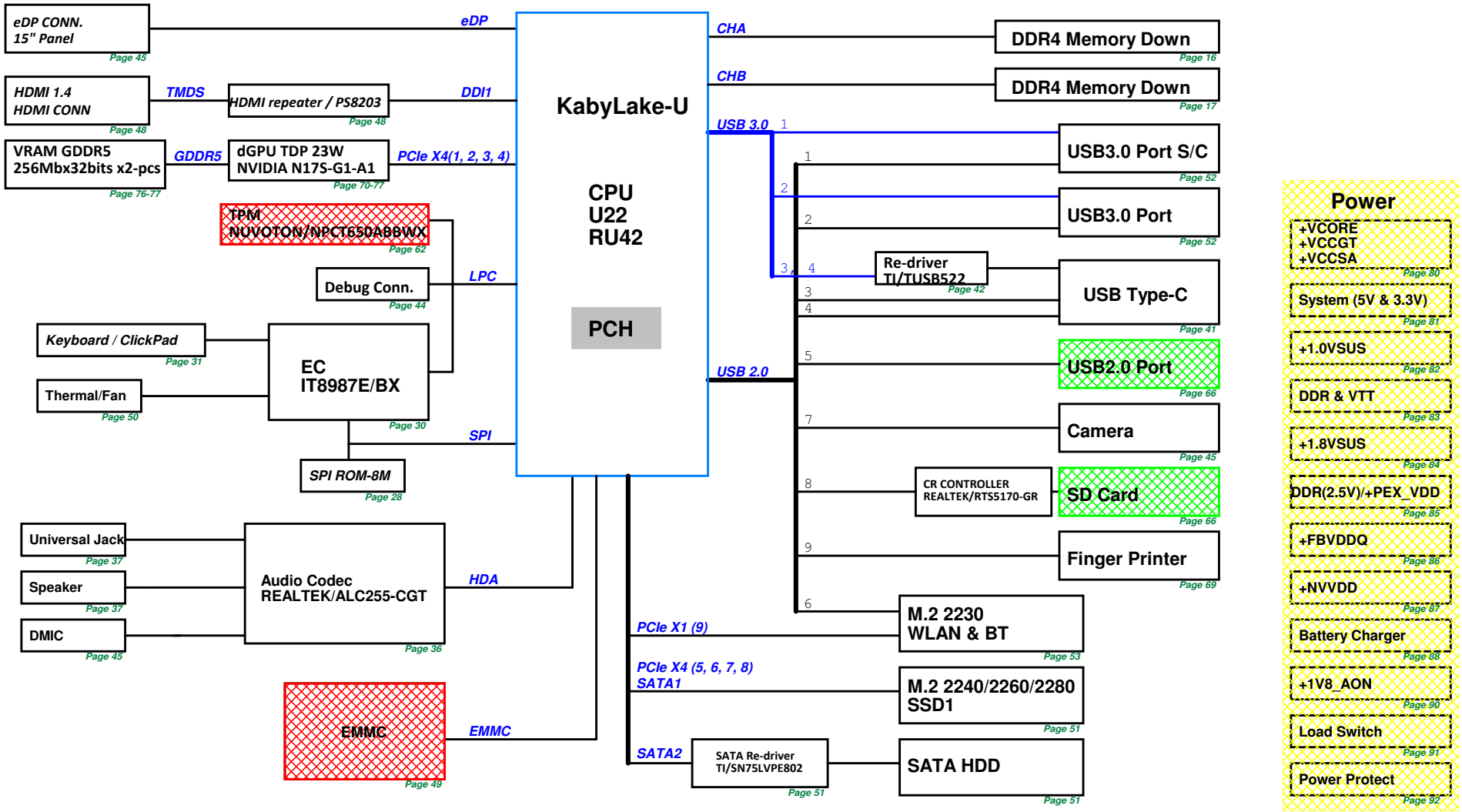

PEGATRON
PEGATRON PROPRIETARY AND CONFIDENTIAL
SGI-HW3 RD

Title : Block Diagram

Engineer: Andy2_Kao

Size	Project Name	Rev
C	BE5EA	1.0

Date: Thursday, May 11, 2017 Sheet 1 of 94

Option

Optional	Remark
N/A	Mount
/@	Ummount
/Debug	Debug only
/EMI	Reserved EMI part
/UMA	Support UMA
/VGA	Support VGA
/SDP	Support SDP DRAM
/DDP	Support DDP DRAM
/U22	Support 2+2 CPU
/U42	Support 4+2 CPU
/14inch	Support 14"
/15inch	Support 15"
/TPM	Support TPM function
/IOAC	Support IOAC
/NON-IOAC	Not support IOAC
/PTP	Support PTP
/NON-PTP	Not support PTP

/SSD1	Support M.2 SSD1
/SSD2	Support M.2 SSD2
/EMMC	Support EMMC

CPU(1)_DDI_eDP

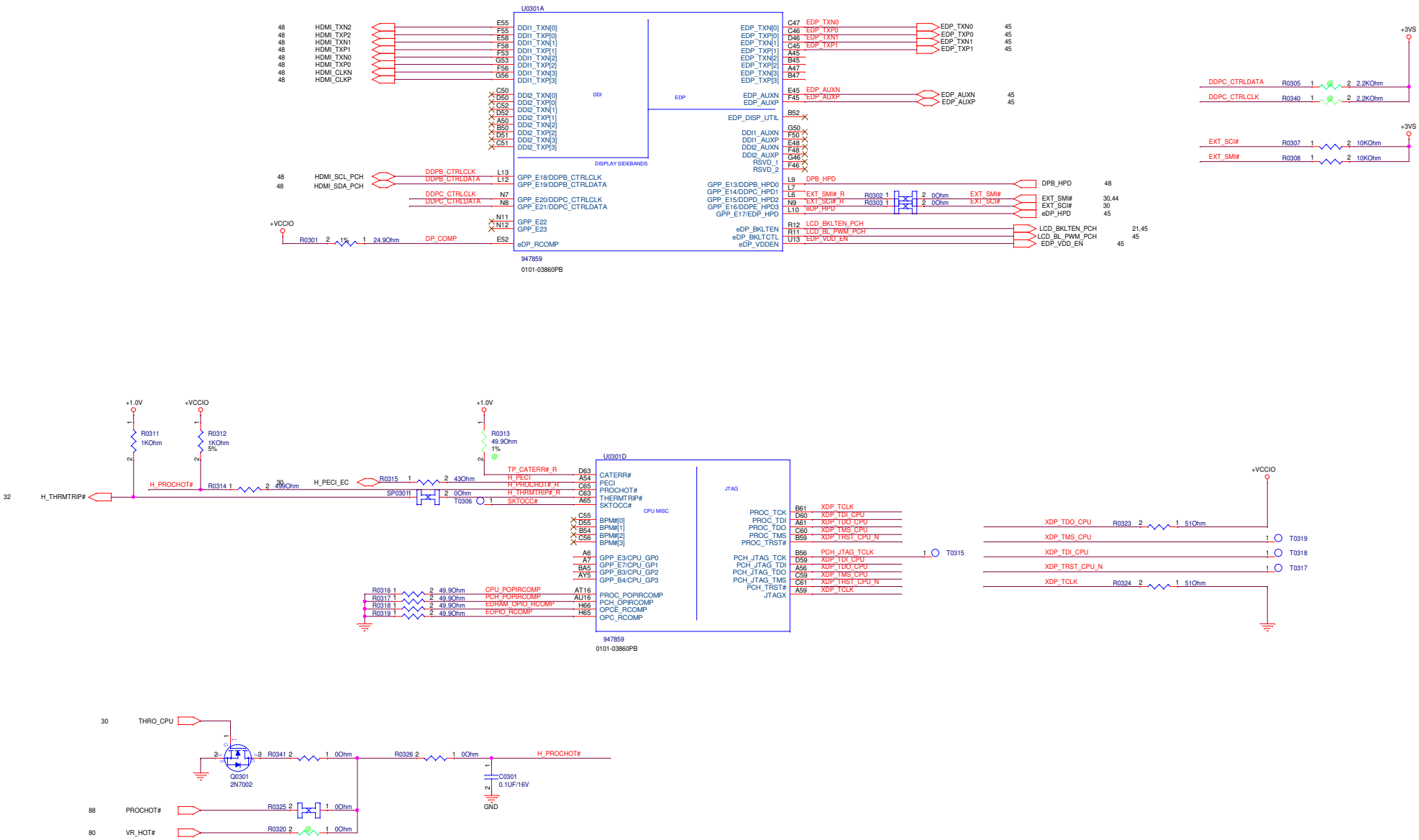

PEGATRON Title : CPU(1)_DDI_eDP

PEGATRON PROPRIETARY AND CONFIDENTIAL

BG1-HW3 RD

Engineer: Andy2_Kao

Size	Project Name	Rev
C	BE5EA	1.0

Date: Thursday, May 11, 2017 Sheet 3 of 94

Memory bus_DDR4

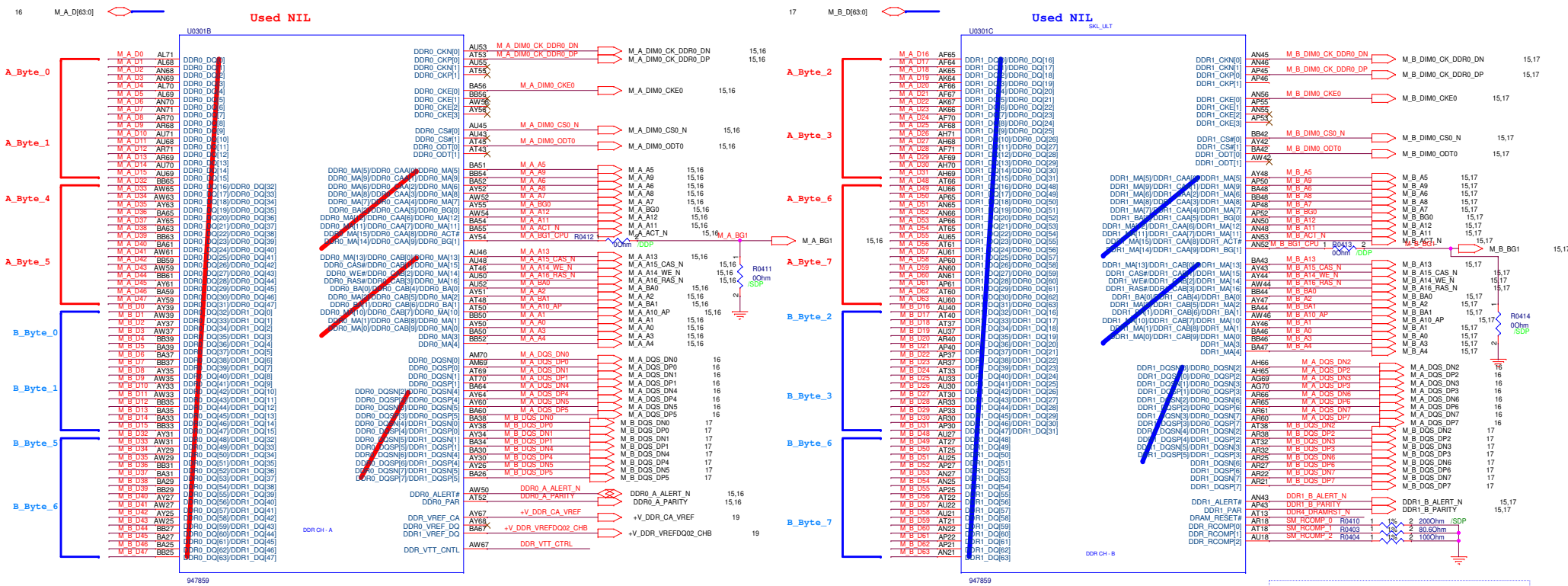

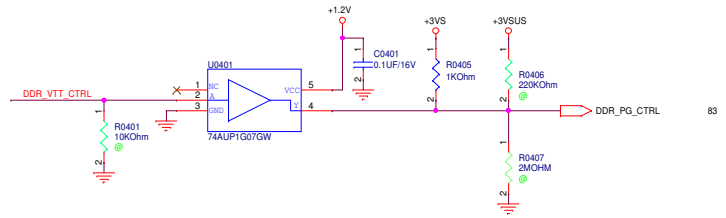

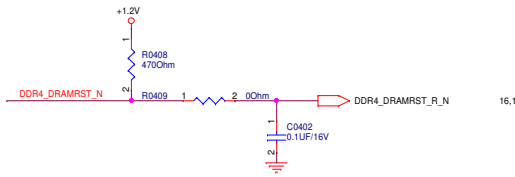

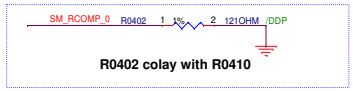

SM_RCOMP_0

RCOMP[0] value for SDP is 200+/-1% ohm, and for DDP is 121+/- 1% ohm

DDP-121ohm(10V220000280)

EMI

Symbol U0301 B

	interleaved(Symbol default)	Non-interleaved
BYTE 0	ChannelA DQ[0..63] DQS/DQS#[0..7]	ChannelA DQ[0..15] DQS/DQS#[0,1]
BYTE 1		
BYTE 2		ChannelADQ[32..47] DQS/DQS#[4,5]
BYTE 3		
BYTE 4		ChannelB DQ[0..15] DQS/DQS#[0,1]
BYTE 5		
BYTE 6		ChannelB DQ[32..47] DQS/DQS#[4,5]
BYTE 7		

Symbol U0301 C

	interleaved(Symbol default)	Non-interleaved
BYTE 0	ChannelB DQ[0..63] DQS/DQS#[0..7]	ChannelA DQ[16..31] DQS/DQS#[2,3]
BYTE 1		
BYTE 2		ChannelADQ[48..63] DQS/DQS#[6,7]
BYTE 3		
BYTE 4		ChannelB DQ[16..31] DQS/DQS#[2,3]
BYTE 5		
BYTE 6		ChannelB DQ[48..63] DQS/DQS#[6,7]
BYTE 7		

PEGATRON Title : Memory bus_DDR4

PEGATRON PROPRIETARY AND CONFIDENTIAL

BG1-HW3 RD

Engineer: Andy2_Kao

Size	Project Name	Rev
C	BE5EA	1.0

Date: Thursday, May 11, 2017 Sheet 4 of 94

05

CPU(3)_+VCCCORE

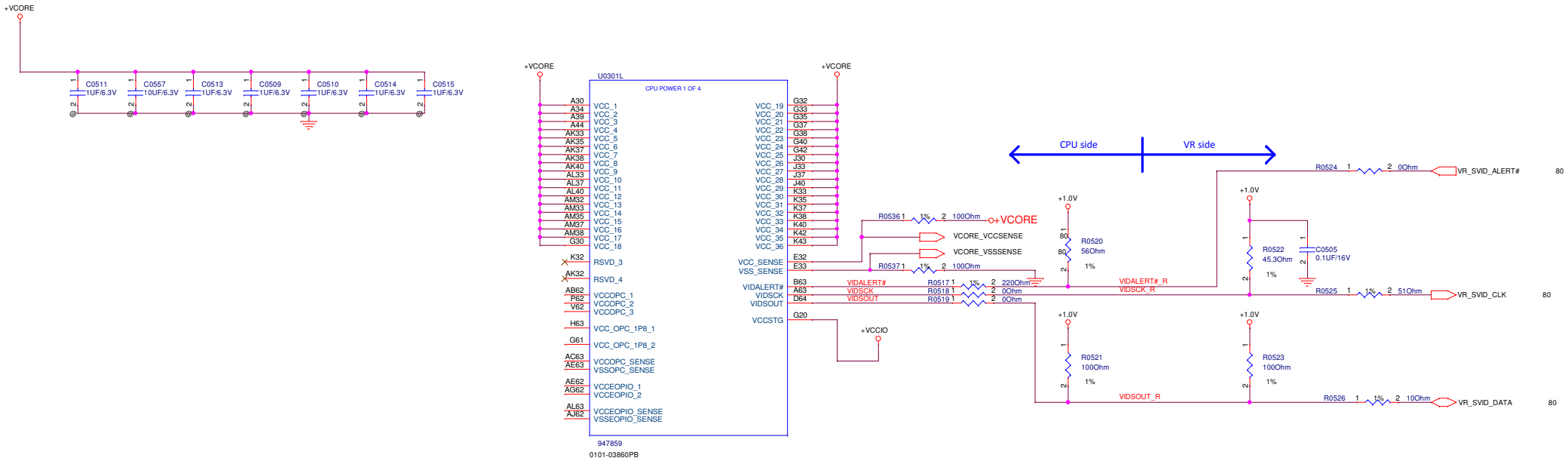

PEGATRON Title :CPU(3)_+VCCCORE

PEGATRON PROPRIETARY AND CONFIDENTIAL

BG1-HW3 RD

Engineer: Andy2_Kao

Size	Project Name	Rev
Custom	BE5EA	1.0

Date: Thursday, May 11, 2017 Sheet 5 of 94

R1.1 follow intel PDG

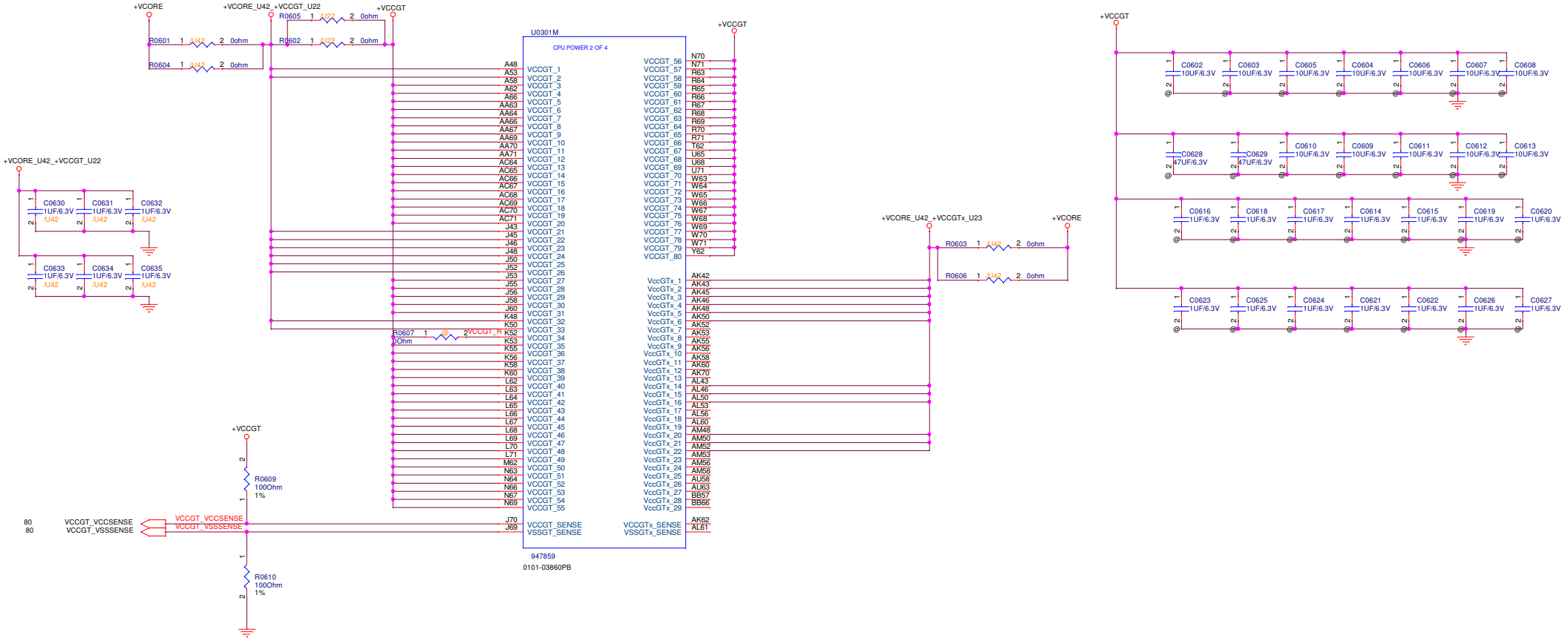

PEGATRON Title : CPU(4)_+VCCGT

PEGATRON PROPRIETARY AND CONFIDENTIAL

BG1-HW3 RD Engineer: Andy2_Kao

Size	Project Name	Rev
Custom	BE5EA	1.0

Date: Thursday, May 11, 2017 Sheet 6 of 94

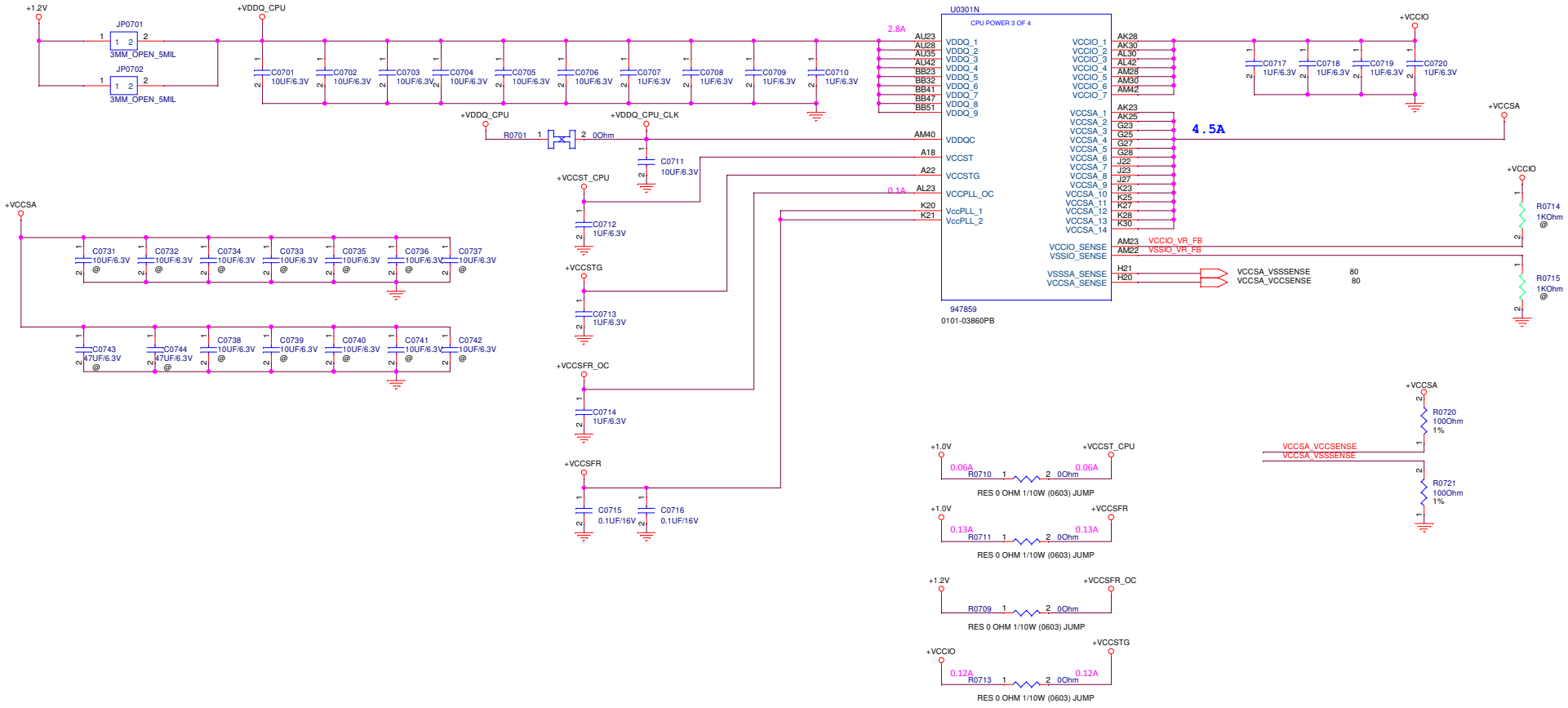

PEGATRON
PEGATRON PROPRIETARY AND CONFIDENTIAL
BG1-HW3 RD

Title: CPU(5)_+VDDQ/IO/SA

Engineer: Andy2_Kao

Size	Project Name	Rev
Custom	BE5EA	1.0

Date: Thursday, May 11, 2017 Sheet 7 of 94

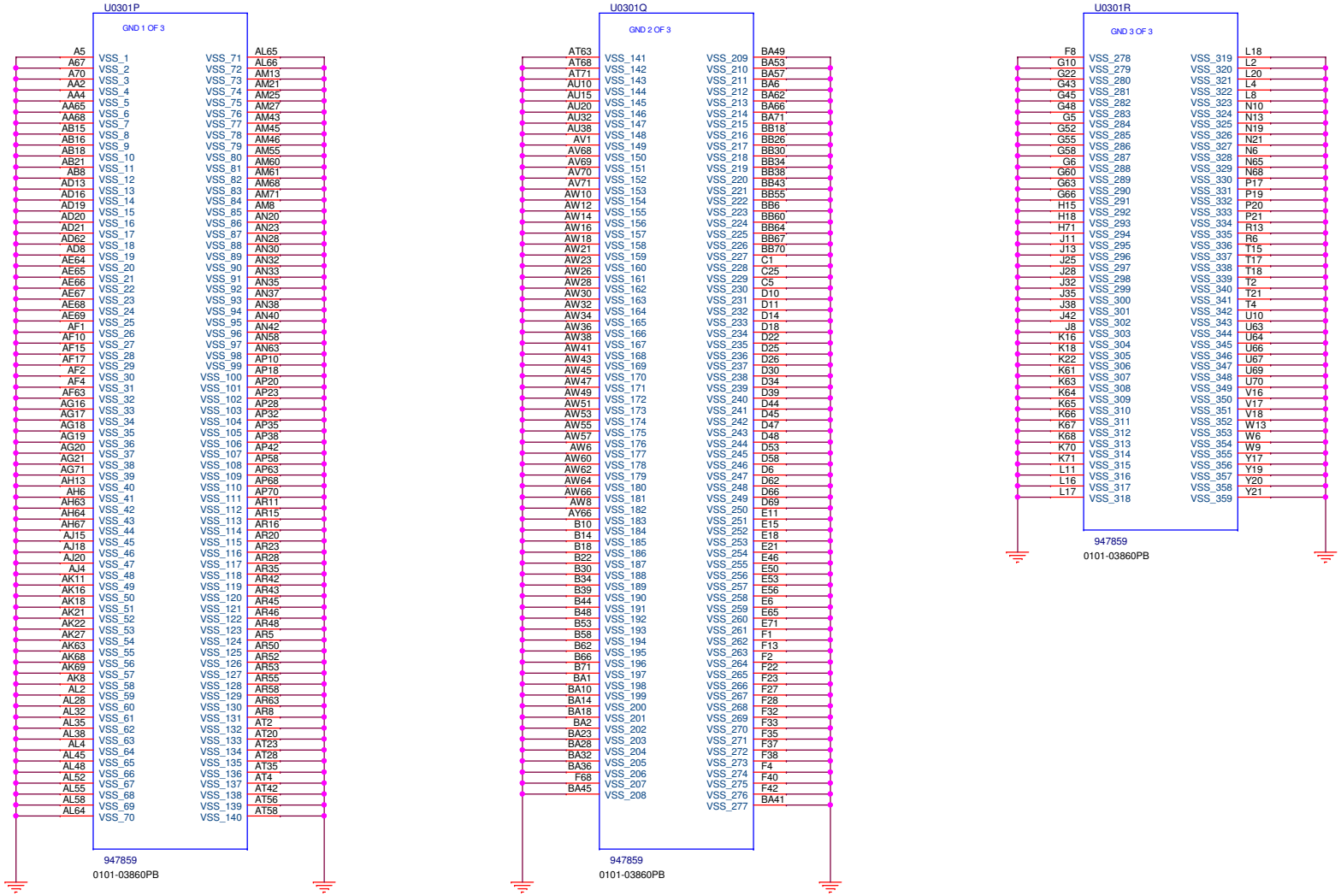

PEGATRON

PEGATRON PROPRIETARY AND CONFIDENTIAL

Title : CPU(6)_CPU GND

BG1-HW3 RD

Engineer: Andy2_Kao

Size	Project Name	Rev
Custom	BE5EA	1.0

Date: Thursday, May 11, 2017 Sheet 8 of 94

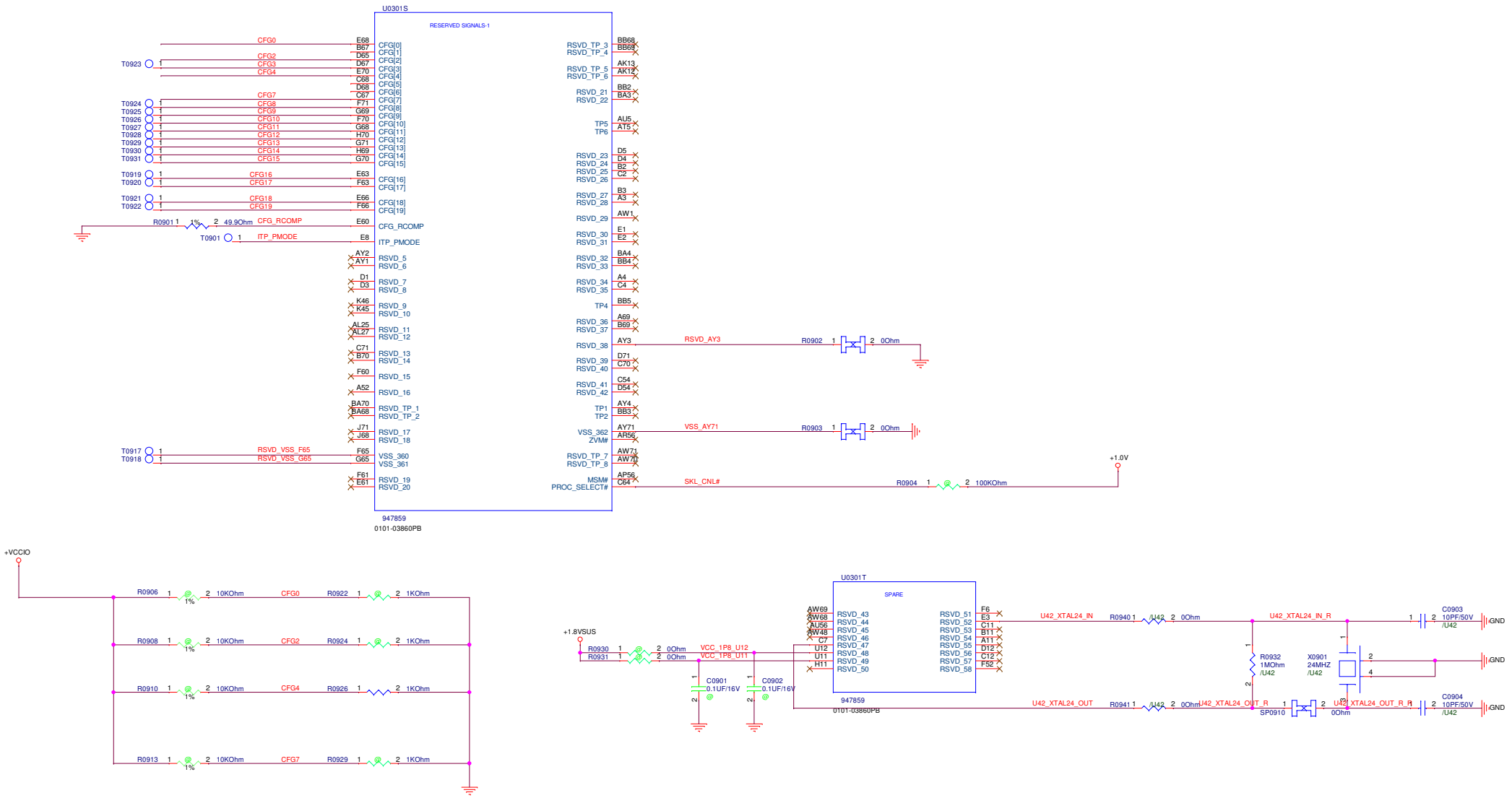

PEGATRON

PEGATRON PROPRIETARY AND CONFIDENTIAL

BG1-HW3 RD

Title :CPU(7)_CFG/RSVD

Engineer: Andy2_Kao

Size	Project Name	Rev
Custom	BE5EA	1.0

Date: Thursday, May 11, 2017 Sheet 9 of 94

PEGATRON

PEGATRON PROPRIETARY AND CONFIDENTIAL

Title : Block Diagram

BG1-HW3 RD

Engineer: Andy2_Kao

Size	Project Name	Rev
A	BE5EA	1.0

Date: Thursday, May 11, 2017 Sheet 10 of 94

Title	<Title>
Size A	Document Number BE5EA
Rev	1.0
Date:	Thursday, May 11, 2017
Sheet	11 of 94

Title	<Title>
Size A	Document Number BE5EA
Rev	1.0
Date:	Thursday, May 11, 2017
Sheet	12 of 94

Title	<Title>
Size A	Document Number BE5EA
Rev	1.0
Date:	Thursday, May 11, 2017
Sheet	13 of 94

Title	<Title>
Size A	Document Number BE5EA
Rev	1.0
Date:	Thursday, May 11, 2017
Sheet	14 of 94

CHA

CHB

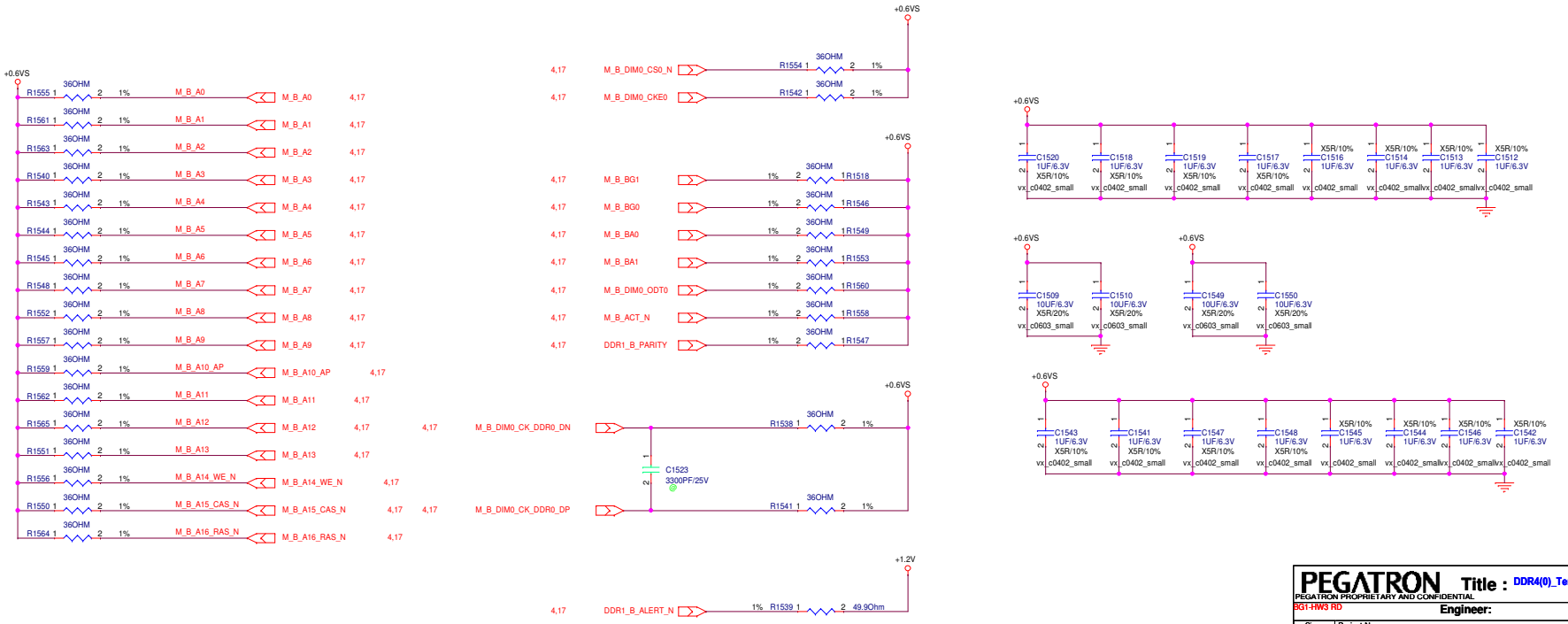

PEGATRON Title : DDR4(0)_Termination

PEGATRON PROPRIETARY AND CONFIDENTIAL

BG1-HW3 RD

Engineer:

Size	Project Name	Rev
C	BE5EA	1.0

Date: Thursday, May 11, 2017 Sheet 15 of 94

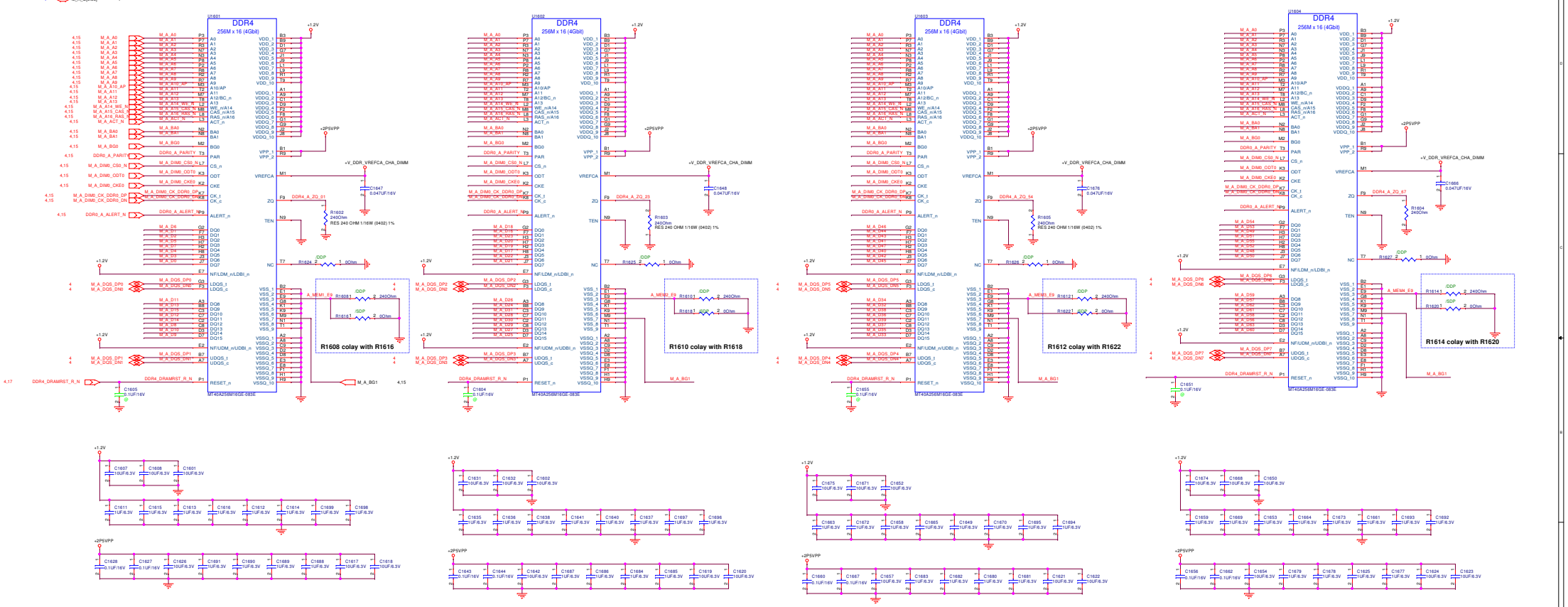

PEGATRON Title : DDR4(1)_CH0

PEGATRON PROPRIETARY AND CONFIDENTIAL

G01-HW3 R0 Engineer:

Size	Project Name	Rev
Custom	BESEA	1.0

Date: Thursday, May 11, 2017 Sheet 18 of 34

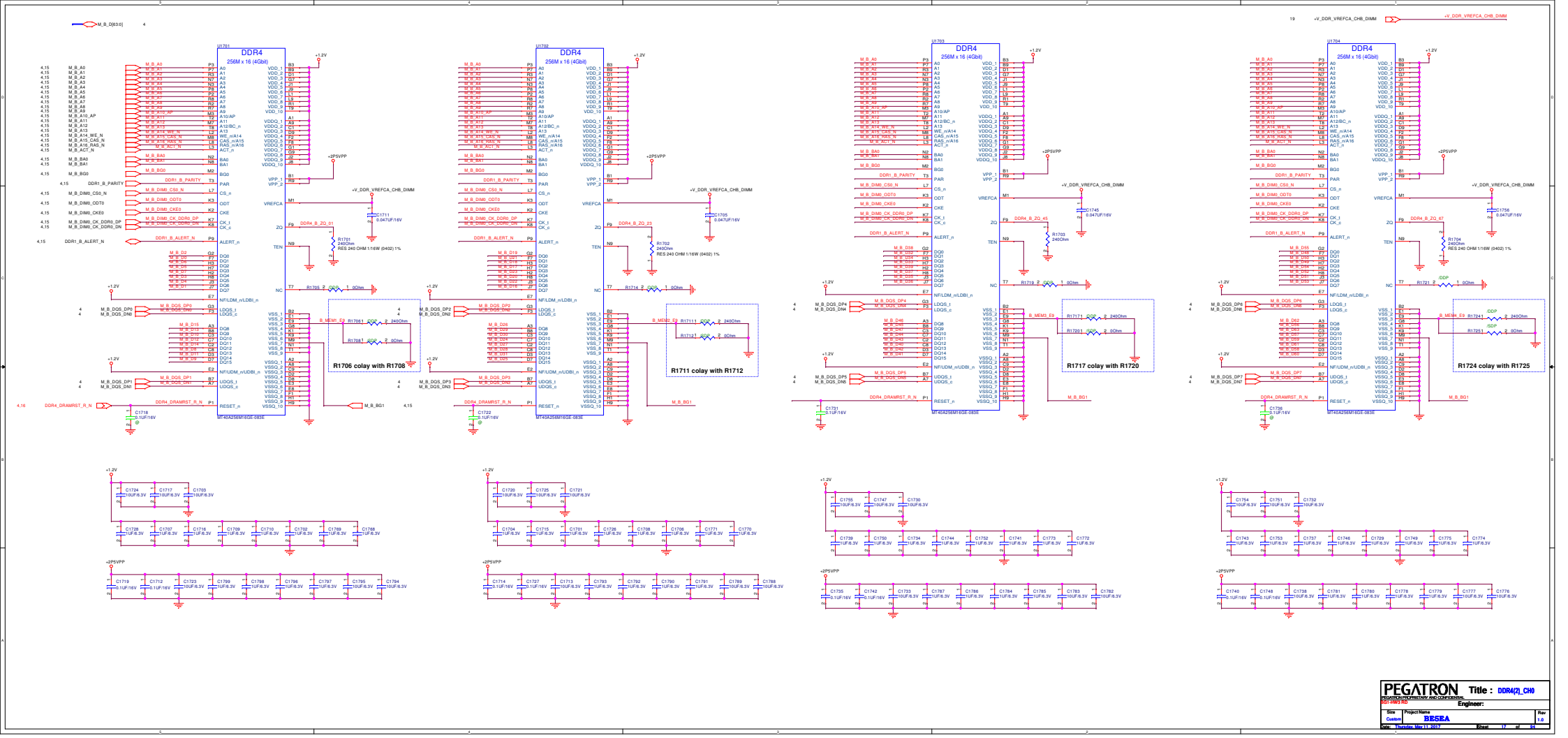

PEGATRON
PEGATRON PROPRIETARY AND CONFIDENTIAL
Title : DDR4(2)_CH0
G01-HW3 R0
Engineer:

Size	Project Name	Rev
Custom	BESEA	1.0

Date: Thursday, May 11, 2017 Sheet 17 of 34

Title	<Title>
Size A	Document Number BE5EA
Rev	1.0
Date:	Thursday, May 11, 2017
Sheet	18 of 94

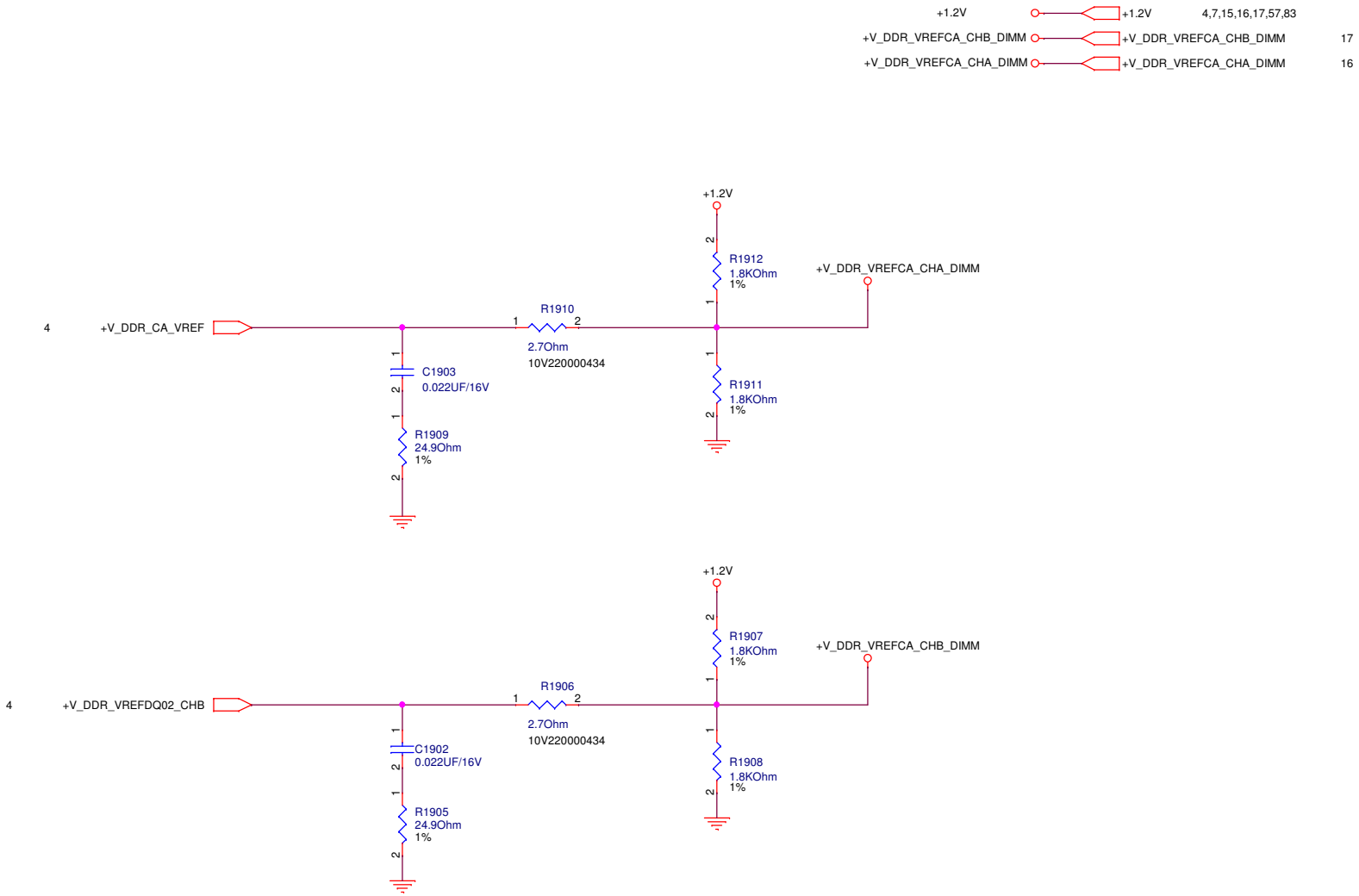

PEGATRON Title : DDR4(3)_CA/DQ Voltage

BG1-HW3 RD Engineer: Andy2_Kao

Size	Project Name	Rev
B	BE5EA	1.0

Date: Thursday, May 11, 2017 Sheet 19 of 94

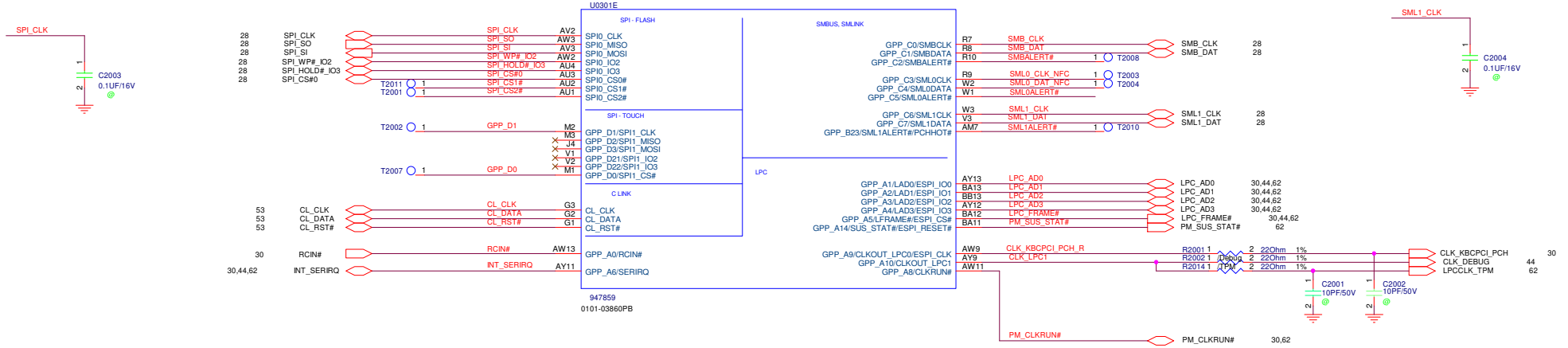

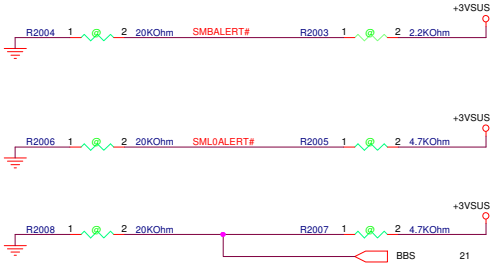

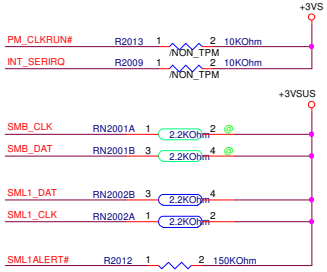

PEGATRON
PEGATRON PROPRIETARY AND CONFIDENTIAL

Title : PCH(1)_SPI/LPC

BG1-HW3 RD

Engineer: Andy2_Kao

Size	Project Name	Rev
Custom	BE5EA	1.0

Date: Thursday, May 11, 2017 Sheet 20 of 94

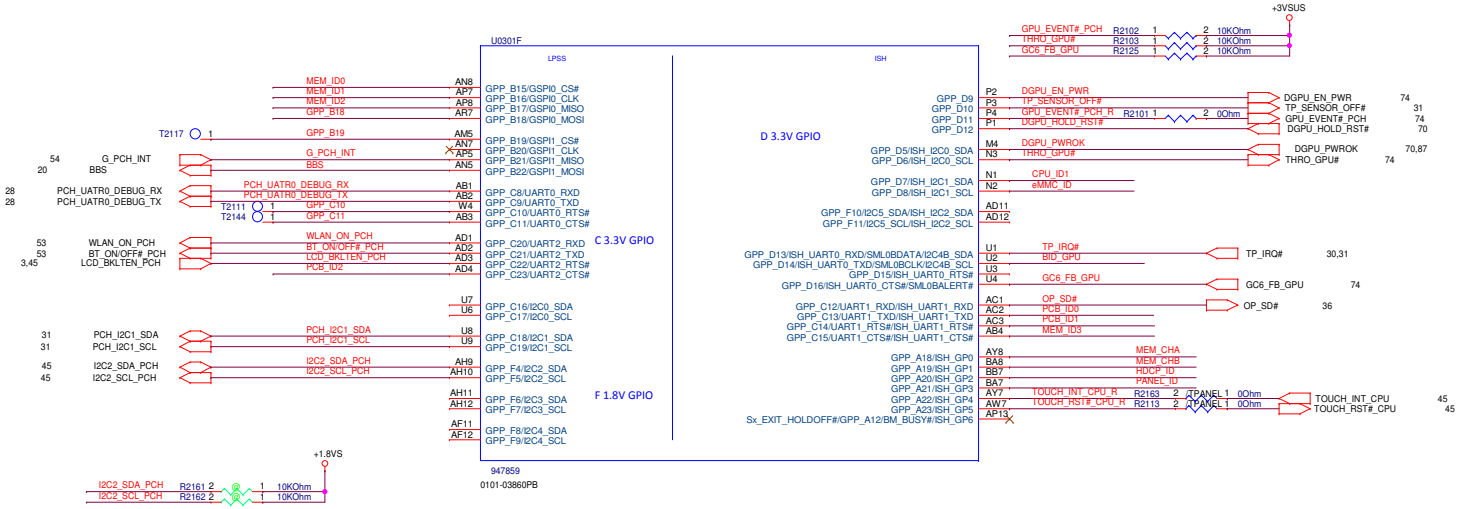

2017.5.5
R1.5 ---Change PCB_ID to R1.5
2017.4.12
R1.4 ---Change PCB_ID to R1.4
2017.3.24
R1.3 ---Change PCB_ID to R1.3
2017.3.21
R1.2 ---Change PCB_ID to R1.2

PCB ID

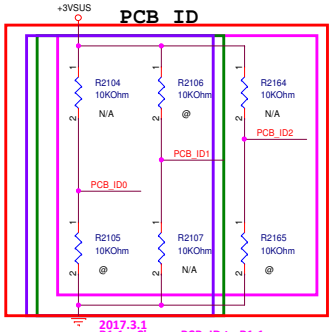

2017.3.1
R1.1---Change PCB_ID to R1.1

	PCB_ID2 (GPP_C23)	PCB_ID1 (GPP_C14)	PCB_ID0 (GPP_C13)
R10	0	0	0
R11	0	0	1
R12	0	1	0
R13	0	1	1
R14	1	0	0
R15	1	0	1
R20	1	1	0

Memory ID

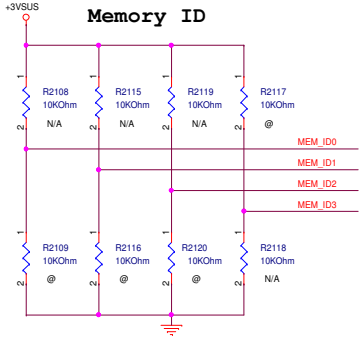

	MEM_ID3 (GPP_C15)	MEM_ID2 (GPP_B17)	MEM_ID1 (GPP_B16)	MEM_ID0 (GPP_B15)
HYNIX DDR4 2400 8Gb H5AN8G6NAFR-UHC 0315-01W60PB	0	0	0	0
MICRON DDR4 2400 4Gb MT40A256M16GE-083E:B 0315-01W80PB	0	0	0	1
MICRON DDR4 2400 8Gb MT40A512M16JY-083E:B 0315-01W90PB	0	0	1	0
SAMSUNG DDR4 2400 4Gb K4A4G165WE-BCRC 0315-01VV0PB	0	0	1	1
HYNIX DDR4 2400 4Gb H5AN4G6NAFR-UHC 0315-01WM0PB	0	1	0	0
SAMSUNG DDR4 2400 8Gb K4A8G165WB-BCRC 0315-01C80PB	0	1	0	1
HYNIX DDR4 2133 4Gb H5AN4G6NAFR-TFC 0315-01EK0PB	0	1	1	0
MICRON DDR4 2400 16Gb MT40A1G16WBU-083E:B 0315-01YC0PB	0	1	1	1
HYNIX DDR4 2400 16Gb H5ANAG6NAMR-UHC 0315-02640PB	1	0	0	0

MB BD ID

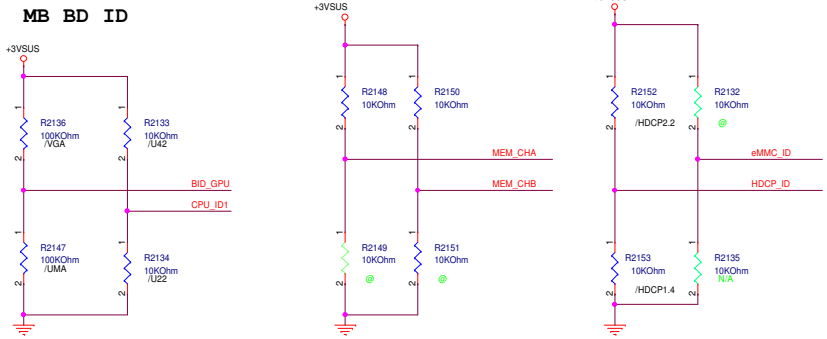

	CPU_ID1
U22	0
U42	1

	CHA	CHB
GPP_A18(0)	Disable	
GPP_A18(1)	Enable	
GPP_A19(0)		Disable
GPP_A19(1)		Enable

	eMMC_ID
Disable	0
Enable	1

	BID_GPU
UMA	0
DIS	1

PANEL ID

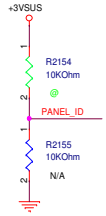

	PANEL_ID
14"	1
15"	0

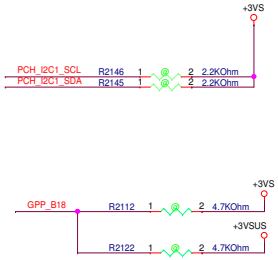

PEGATRON Title : PCH(2)_ISH
PEGATRON PROPRIETARY AND CONFIDENTIAL
3G1-HW3 RD Engineer: Andy2_Kao
Size Custom | Project Name BE5EA | Rev 1.0
Date: Thursday, May 11, 2017 Sheet 21 of 94

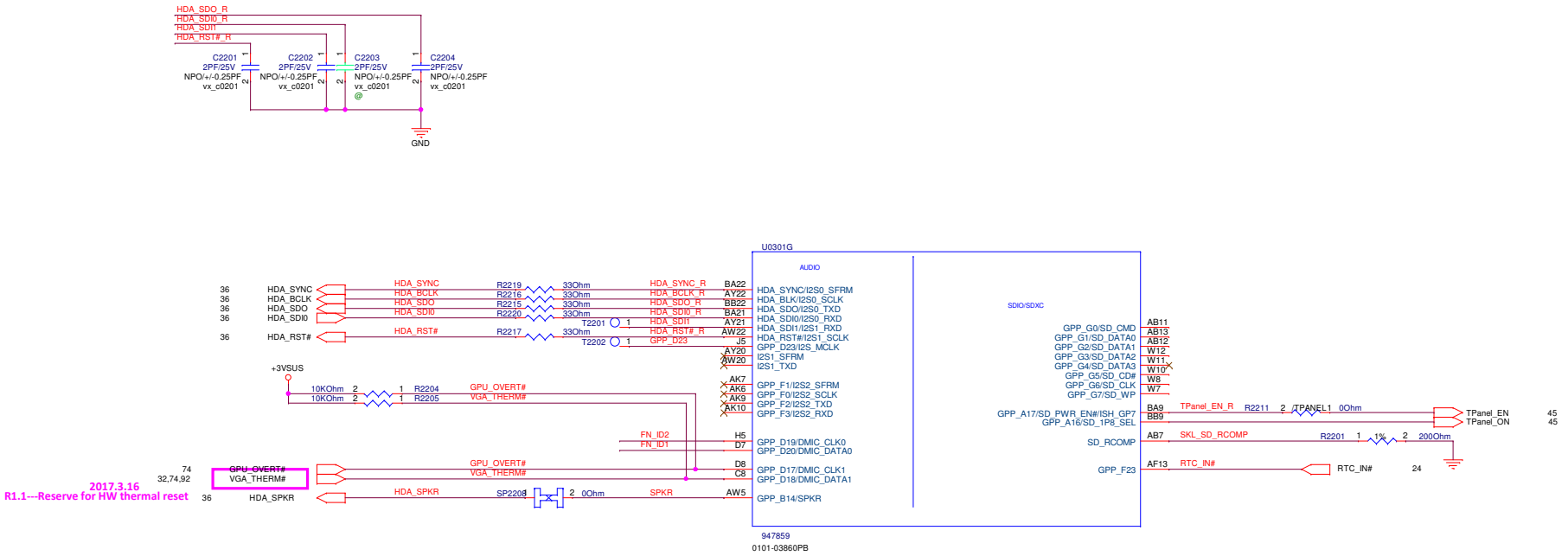

Function ID

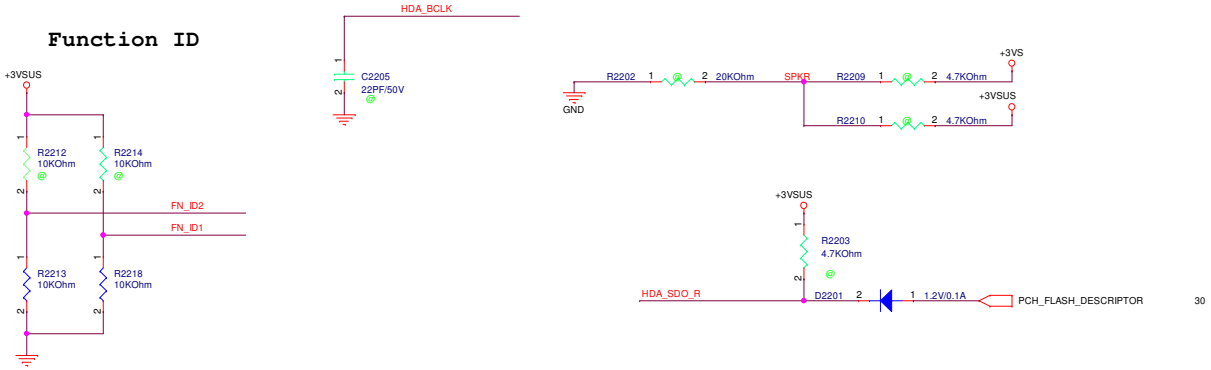

PEGATRON Title : PCH(3)_HDA/SDIO

PEGATRON PROPRIETARY AND CONFIDENTIAL

BG1-HW3 RD Engineer: Andy2_Kao

Size	Project Name	Rev
Custom	BE5EA	1.0

Date: Thursday, May 11, 2017 Sheet 22 of 94

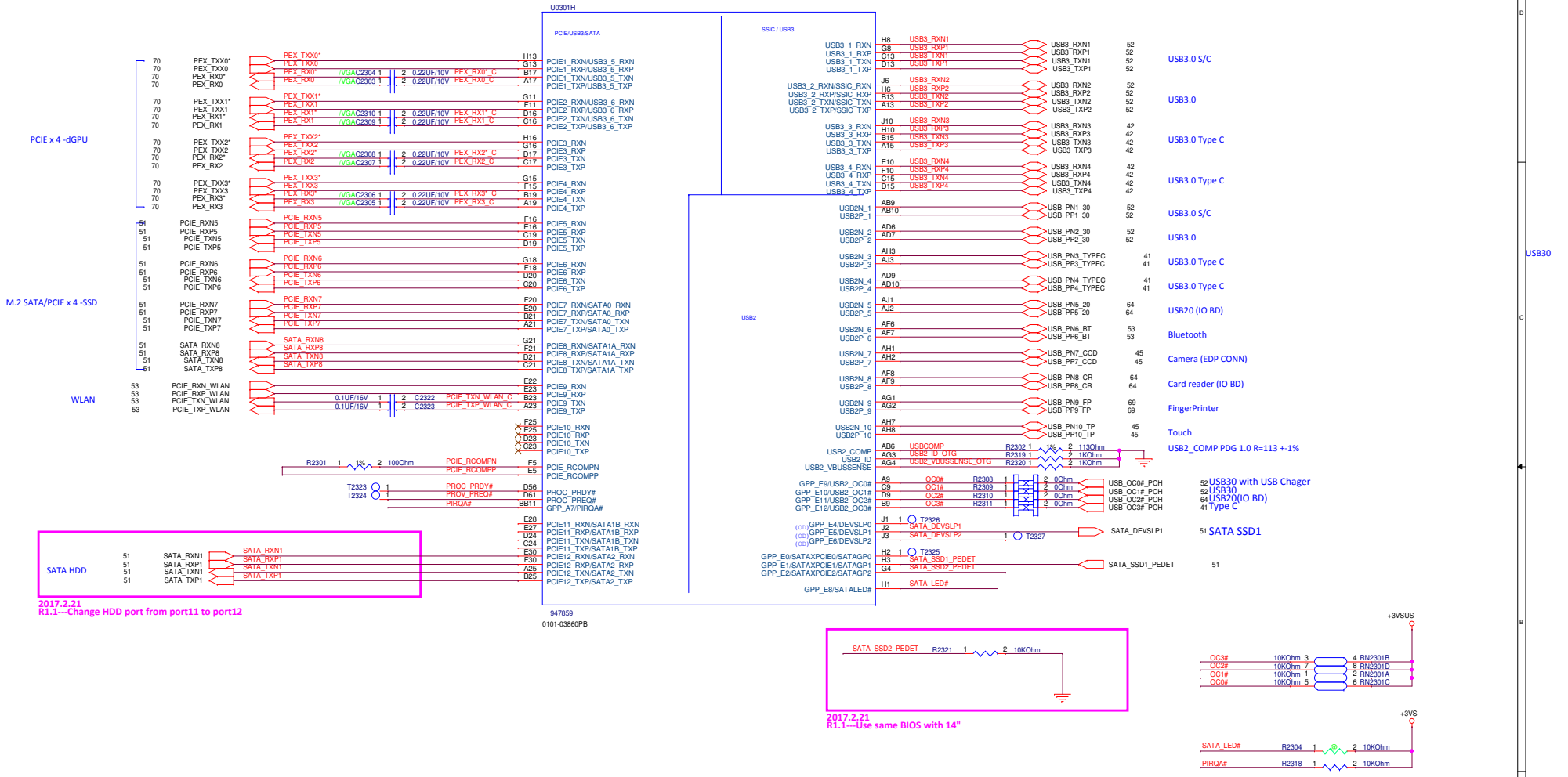

PEGATRON Title : PCH(4)_USB/PCIE/SATA

PEGATRON PROPRIETARY AND CONFIDENTIAL

BG1-HW3 RD

Engineer: Andy2_Kao

Size	Project Name	Rev
C	BE5EA	1.0

Date: Thursday, May 11, 2017 Sheet 23 of 94

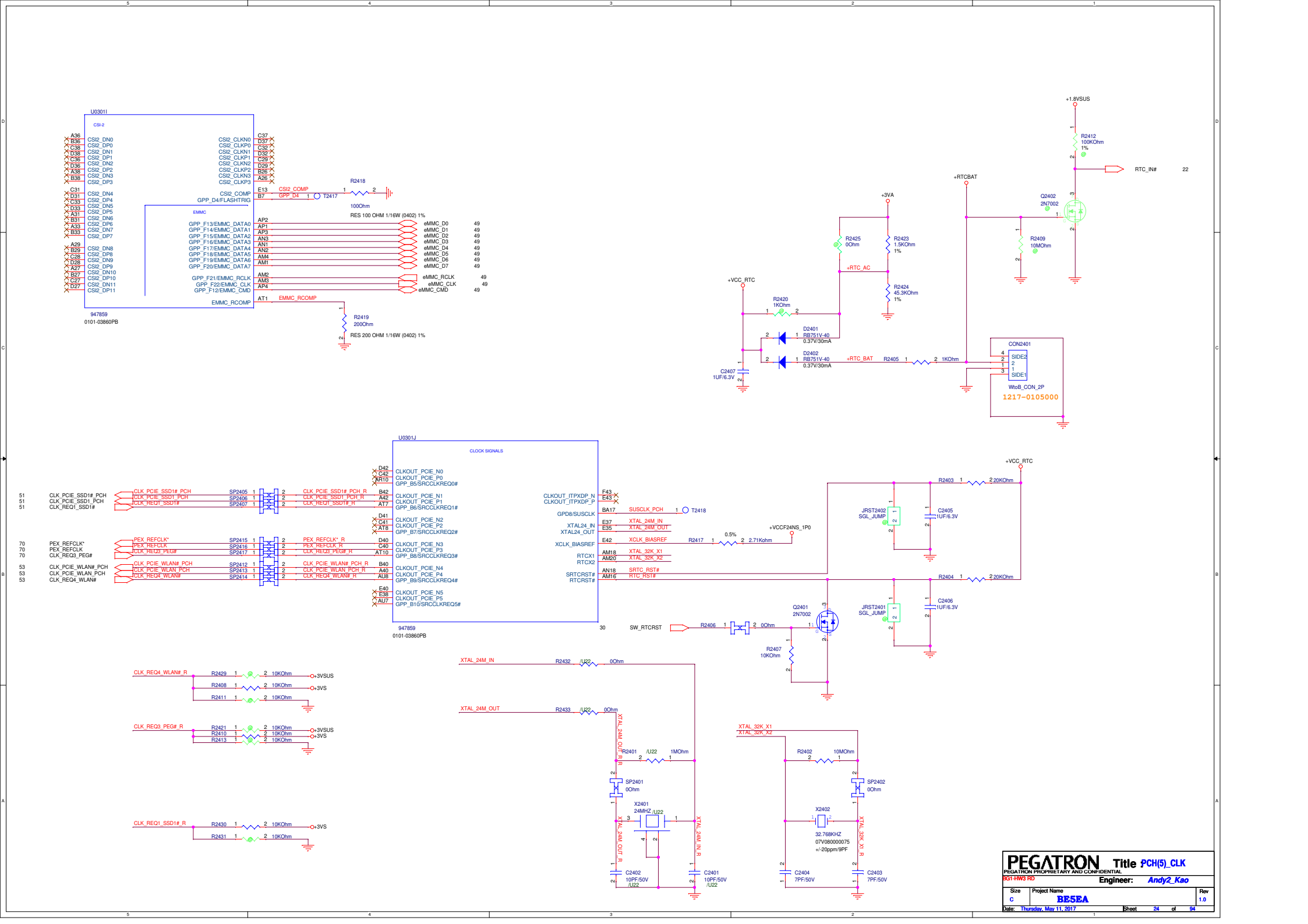
U0301I
CSI-2
EMMC
947859
0101-03860PB
R2418
100Ohm
RES 100 OHM 1/16W (0402) 1%
R2419
200Ohm
RES 200 OHM 1/16W (0402) 1%
+1.8VSUS
R2412
100KOhm
1%
RTC_IN#
Q2402
2N7002
R2409
10MOhm
+RTCBAT
+3VA
R2425
0Ohm
R2423
1.5KOhm
1%
R2424
45.3KOhm
1%
+RTC_AC
+VCC_RTC
R2420
1KOhm
D2401
RB751V-40
0.37V/30mA
D2402
RB751V-40
0.37V/30mA
+RTC_BAT
R2405
1KOhm
C2407
1UF/6.3V
CON2401
SIDE2
SIDE1
WtoB_CON_2P
1217-0105000
U0301J
CLOCK SIGNALS
947859
0101-03860PB
CLK_PCIE_SSD1#_PCH
CLK_PCIE_SSD1_PCH
CLK_REQ1_SSD1#
PEX_REFCLK*
PEX_REFCLK
CLK_REQ3_PEG#
CLK_PCIE_WLAN#_PCH
CLK_PCIE_WLAN_PCH
CLK_REQ4_WLAN#
SUSCLK_PCH
T2418
XTAL_24M_IN
XTAL_24M_OUT
XCLK_BIASREF
R2417
2.71Kohm
+VCCF24NS_1P0
SRTC_RST#
RTC_RST#
R2403
20KOhm
R2404
20KOhm
C2405
1UF/6.3V
C2406
1UF/6.3V
JRST2402
SGL_JUMP
JRST2401
SGL_JUMP
Q2401
2N7002
R2407
10KOhm
R2406
0Ohm
SW_RTCRST
R2432
0Ohm
R2433
0Ohm
R2401
1MOhm
SP2401
0Ohm
X2401
24MHZ
C2402
10PF/50V
C2401
10PF/50V
R2402
10MOhm
SP2402
0Ohm
X2402
32.768KHZ
07V080000075
+/-20ppm/9PF
C2404
7PF/50V
C2403
7PF/50V
R2429
10KOhm
R2408
10KOhm
R2411
10KOhm
R2421
10KOhm
R2410
10KOhm
R2413
10KOhm
R2430
10KOhm
R2431
10KOhm
+3VSUS
+3VS
PEGATRON
Title PCH(5)_CLK
PEGATRON PROPRIETARY AND CONFIDENTIAL
BG1-HW3 RD
Engineer: Andy2_Kao
Size C
Project Name BE5EA
Rev 1.0
Date: Thursday, May 11, 2017
Sheet 24 of 94

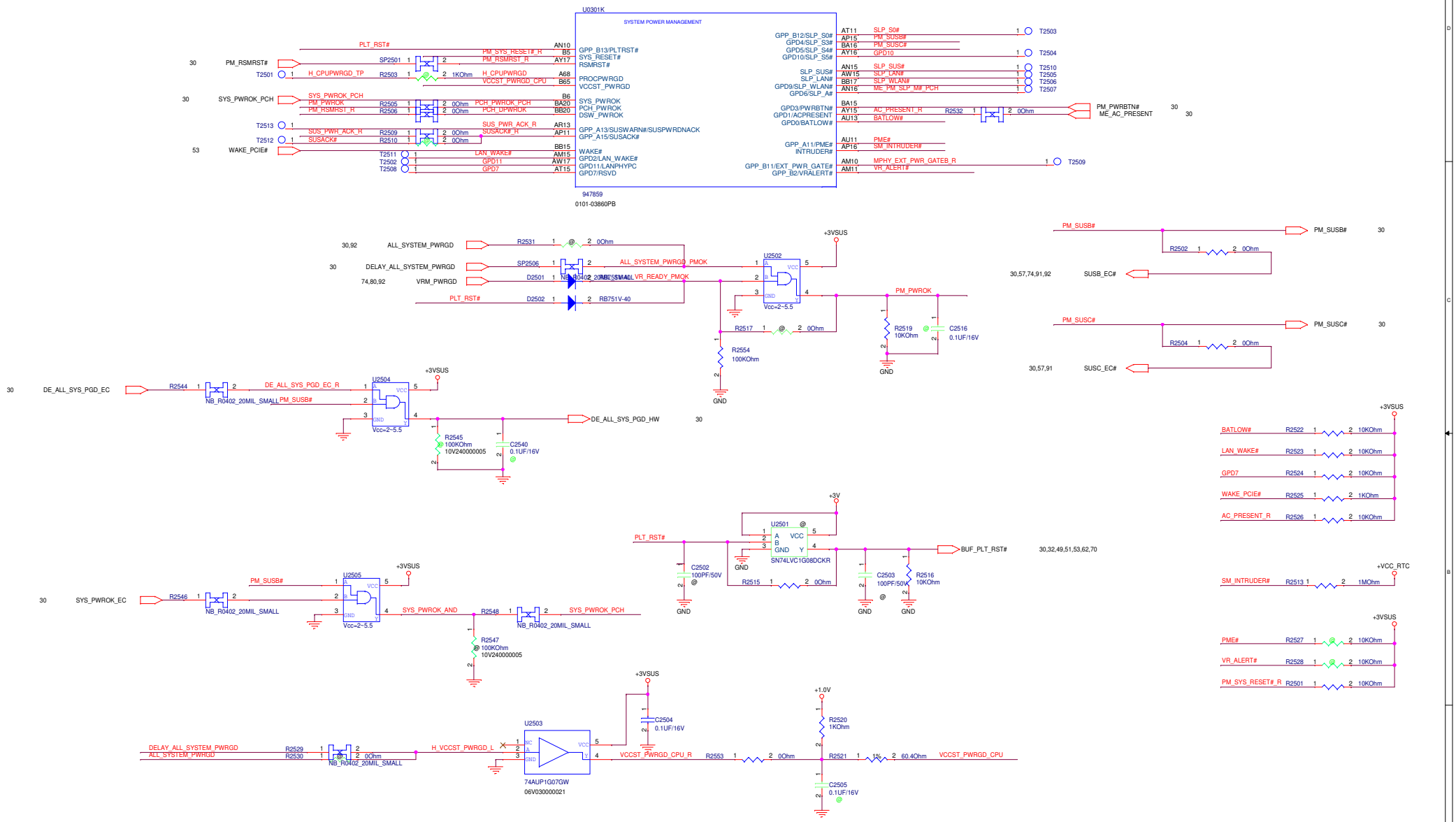

PEGATRON Title : PCH(6)_POWER MANAGE

PEGATRON PROPRIETARY AND CONFIDENTIAL

BG1-HW3 RD

Engineer: Andy2_Kao

Size	Project Name	Rev
C	BE5EA	1.0

Date: Thursday, May 11, 2017 Sheet 25 of 94

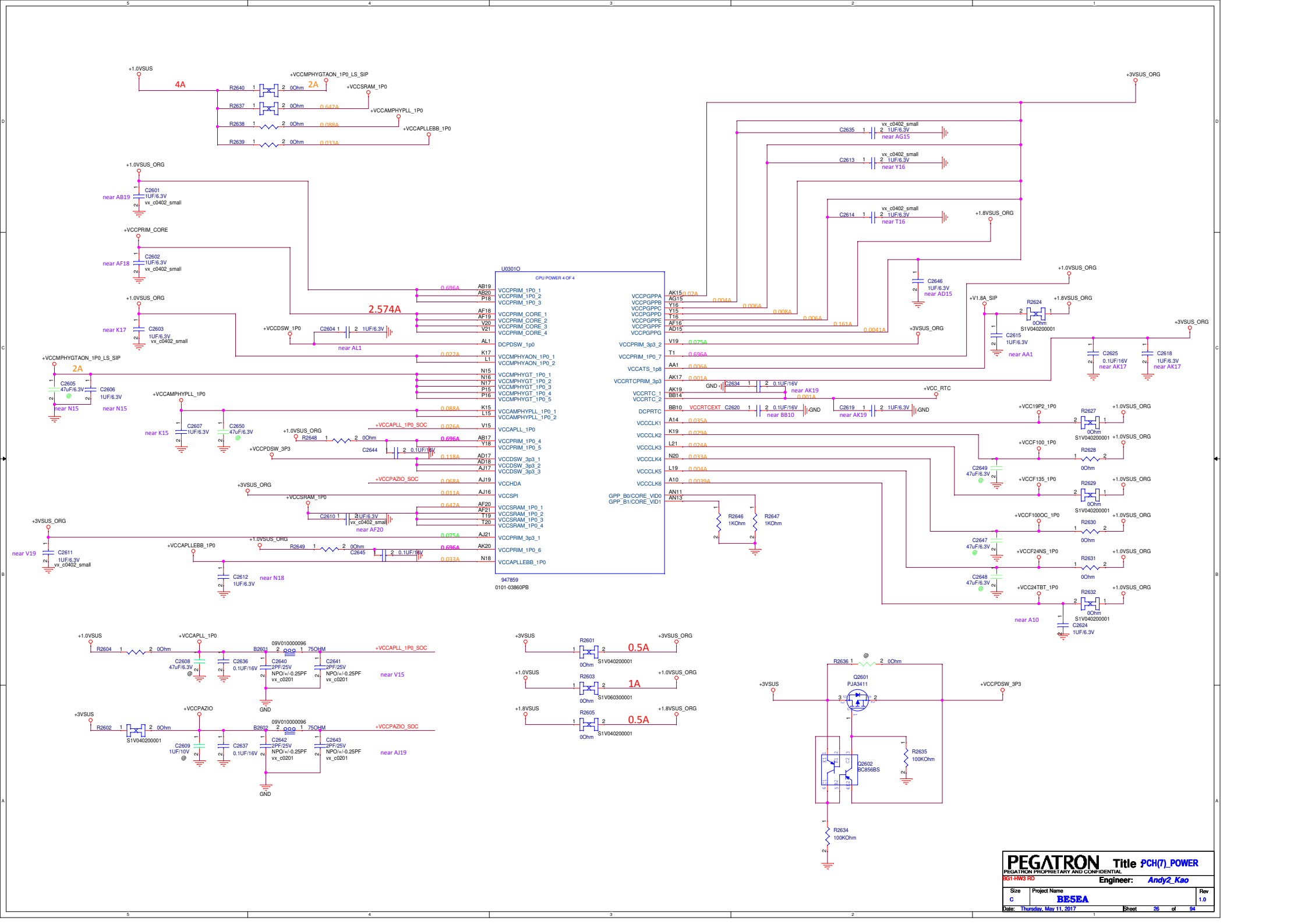

PEGATRON
PEGATRON PROPRIETARY AND CONFIDENTIAL

Title PCH(7)_POWER

BG1-HW3 RD

Engineer: Andy2_Kao

Size	Project Name	Rev
C	BE5EA	1.0

Date: Thursday, May 11, 2017 Sheet 26 of 94

Title	<Title>
Size A	Document Number BE5EA
Rev	1.0
Date:	Thursday, May 11, 2017
Sheet	27 of 94

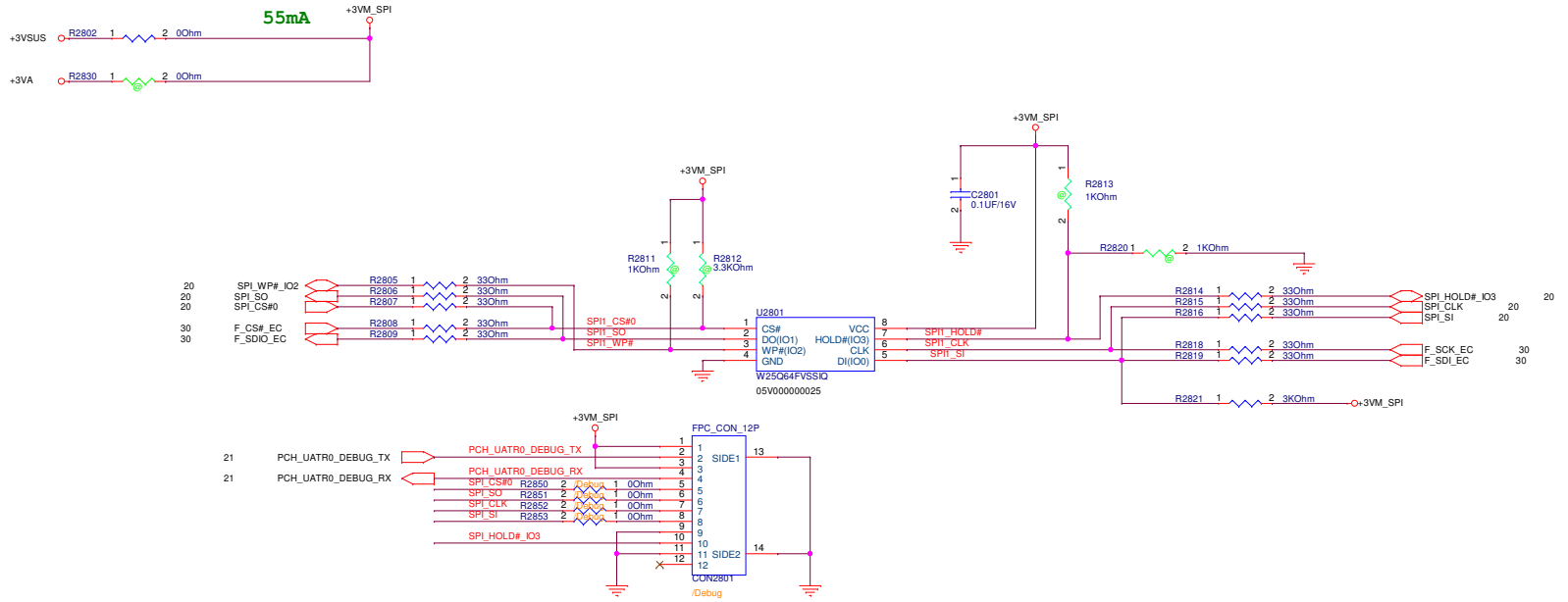

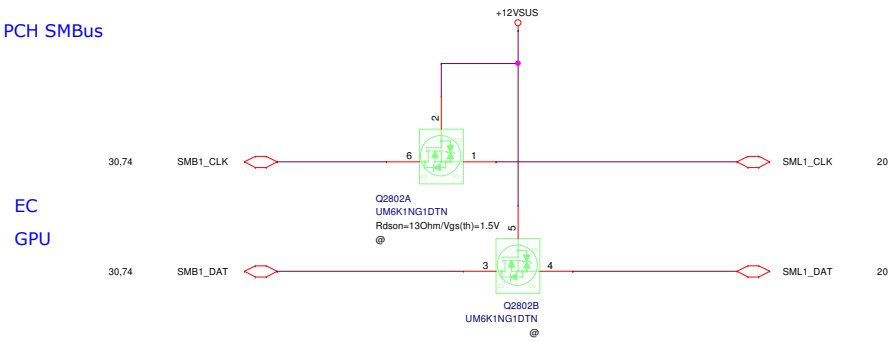

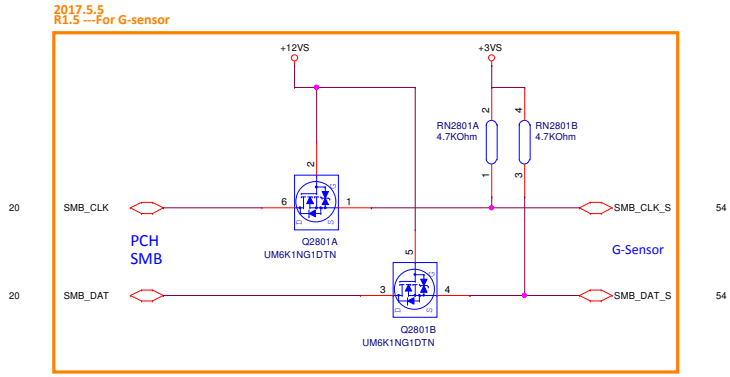

PEGATRON
PEGATRON PROPRIETARY AND CONFIDENTIAL
BG1-HW3 RD

Title : PCH(9)_SPI_SMB

Engineer: Andy2_Kao

Size	Project Name	Rev
Custom	BE5EA	1.0

Date: Thursday, May 11, 2017 Sheet 28 of 94

Title	<Title>	
Size A	Document Number BE5EA	Rev 1.0
Date: Thursday, May 11, 2017	Sheet 29 of 94	

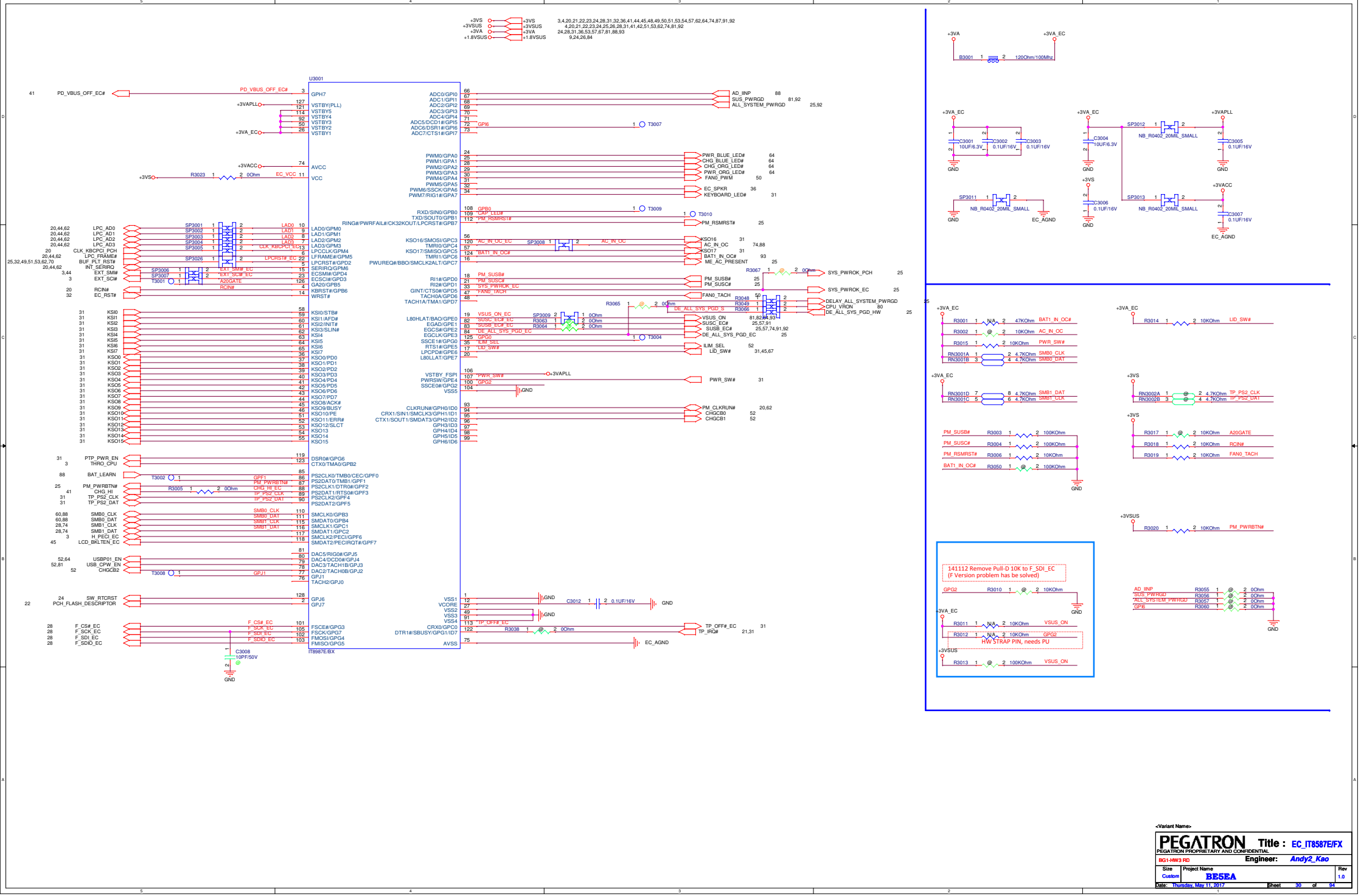
U3001
IT8987E/BX
+3VS
+3VSUS
+3VA
+1.8VSUS
3,4,20,21,22,23,24,28,31,32,36,41,44,45,48,49,50,51,53,54,57,62,64,74,87,91,92
4,20,21,22,23,24,25,26,28,31,41,42,51,53,62,74,81,92
24,28,31,36,53,57,67,81,88,93
9,24,26,84
PD_VBUS_OFF_EC#
+3VAPLL
+3VA_EC
+3VACC
R3023 0Ohm EC_VCC
AD_IINP
SUS_PWRGD
ALL_SYSTEM_PWRGD
GPI6
T3007
PWR_BLUE_LED#
CHG_BLUE_LED#
CHG_ORG_LED#
PWR_ORG_LED#
FAN0_PWM
EC_SPKR
KEYBOARD_LED#
GPB0
T3009
CAP_LED#
T3010
PM_RSMRST#
LPC_AD0
LPC_AD1
LPC_AD2
LPC_AD3
CLK_KBCPCI_PCH
LPC_FRAME#
BUF_PLT_RST#
INT_SERIRQ
EXT_SMI#
EXT_SCI#
RCIN#
EC_RST#
SP3001
SP3002
SP3003
SP3004
SP3005
SP3006
SP3007
SP3026
T3001
LAD0
LAD1
LAD2
LAD3
CLK_KBCPCI_EC
LPCRST# EC
EXT_SMI# EC
EXT_SCI# EC
A20GATE
AC_IN_OC
BAT1_IN_OC#
ME_AC_PRESENT
SYS_PWROK_PCH
SYS_PWROK_EC
PM_SUSB#
PM_SUSC#
FAN0_TACH
DELAY_ALL_SYSTEM_PWRGD
CPU_VRON
DE_ALL_SYS_PGD_HW
VSUS_ON
SUSC_EC#
SUSB_EC#
DE_ALL_SYS_PGD_EC
ILIM_SEL
LID_SW#
T3004
PWR_SW#
PM_CLKRUN#
CHGCB0
CHGCB1
PTP_PWR_EN
THRO_CPU
BAT_LEARN
T3002
PM_PWRBTN#
CHG_HI
TP_PS2_CLK
TP_PS2_DAT
R3005 0Ohm
SMB0_CLK
SMB0_DAT
SMB1_CLK
SMB1_DAT
H_PECI_EC
LCD_BKLTEN_EC
USBP01_EN
USB_CPW_EN
CHGCB2
T3008
GPJ1
SW_RTCRST
PCH_FLASH_DESCRIPTOR
F_CS# EC
F_SCK_EC
F_SDI_EC
F_SDIO_EC
C3008 10PF/50V
C3012 0.1UF/16V
TP_OFF# EC
TP_IRQ#
R3038 0Ohm
EC_AGND
GND
B3001 120Ohm/100Mhz
C3001 10UF/6.3V
C3002 0.1UF/16V
C3003 0.1UF/16V
C3004 10UF/6.3V
C3005 0.1UF/16V
C3006 0.1UF/16V
C3007 0.1UF/16V
NB_R0402_20MIL_SMALL
R3001 47KOhm BAT1_IN_OC#
R3002 10KOhm AC_IN_OC
R3015 10KOhm PWR_SW#
RN3001A 4.7KOhm SMB0_CLK
RN3001B 4.7KOhm SMB0_DAT
R3014 10KOhm LID_SW#
RN3001D 4.7KOhm SMB1_DAT
RN3001C 4.7KOhm SMB1_CLK
RN3002A 4.7KOhm TP_PS2_CLK
RN3002B 4.7KOhm TP_PS2_DAT
R3003 100KOhm PM_SUSB#
R3004 100KOhm PM_SUSC#
R3006 10KOhm PM_RSMRST#
R3050 100KOhm BAT1_IN_OC#
R3017 10KOhm A20GATE
R3018 10KOhm RCIN#
R3019 10KOhm FAN0_TACH
R3020 10KOhm PM_PWRBTN#
141112 Remove Pull-D 10K to F_SDI_EC
(F Version problem has be solved)
R3010 10KOhm GPG2
R3011 10KOhm VSUS_ON
R3012 10KOhm GPG2
HW STRAP PIN, needs PU
R3013 100KOhm VSUS_ON
R3055 0Ohm AD_IINP
R3056 0Ohm SUS_PWRGD
R3057 0Ohm ALL_SYSTEM_PWRGD
R3060 0Ohm GPI6

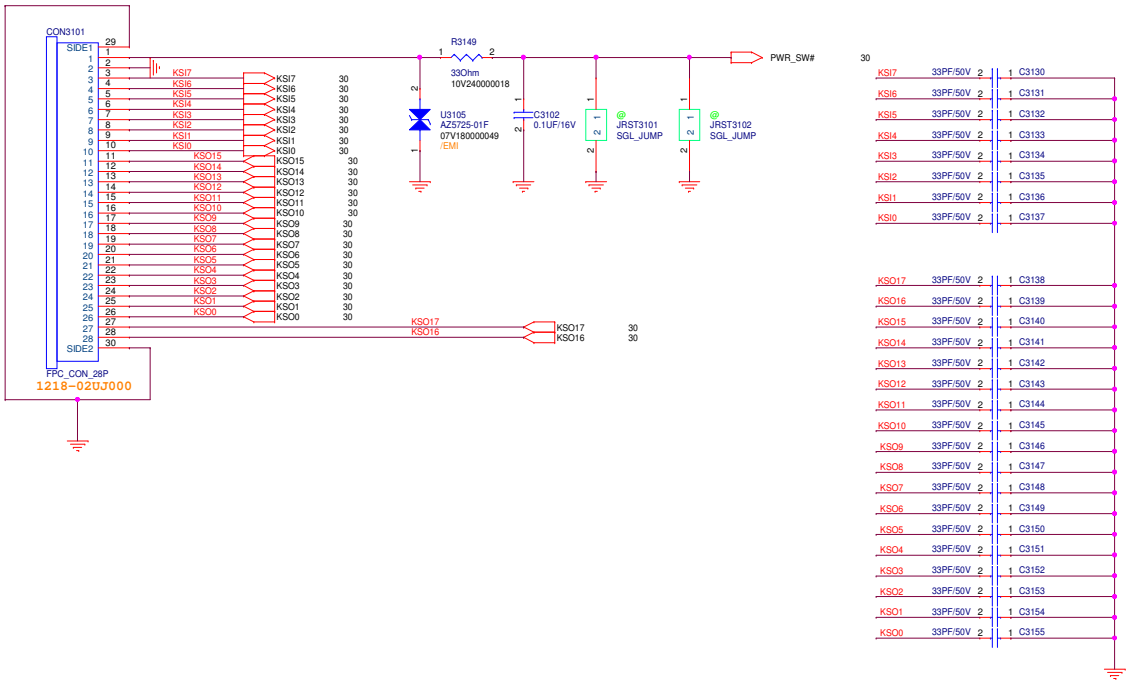

Keyboard Backlight

KEYBOARD_LED#	
1	KB w/o BL
0	KB w/ BL

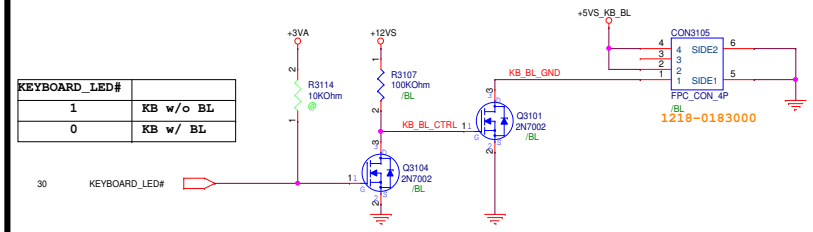

+5VS_KB_BL trace >20mils

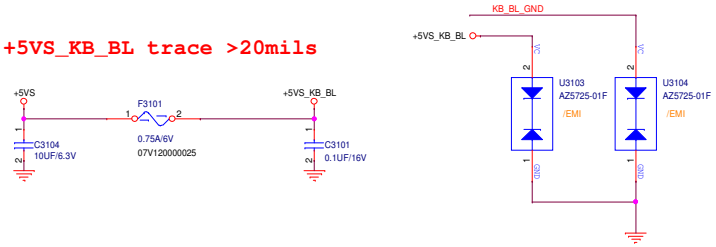

Click Pad

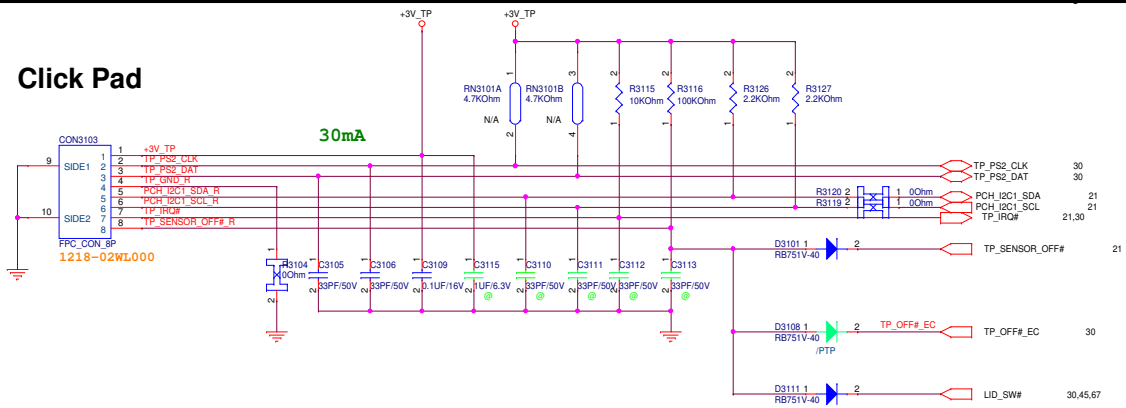

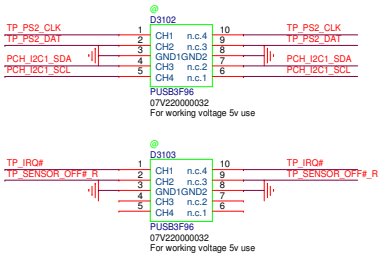

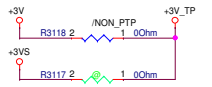

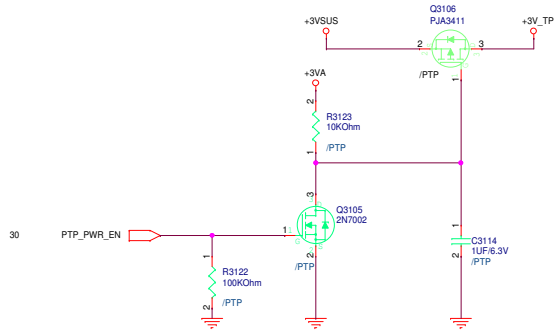

PEGATRON	Title :	KB_TP
BG1-HW3 RD	Engineer:	Andy2_Kao

Size	Project Name	Rev
C	BE5EA	1.0

Date: Thursday, May 11, 2017 Sheet 31 of 94

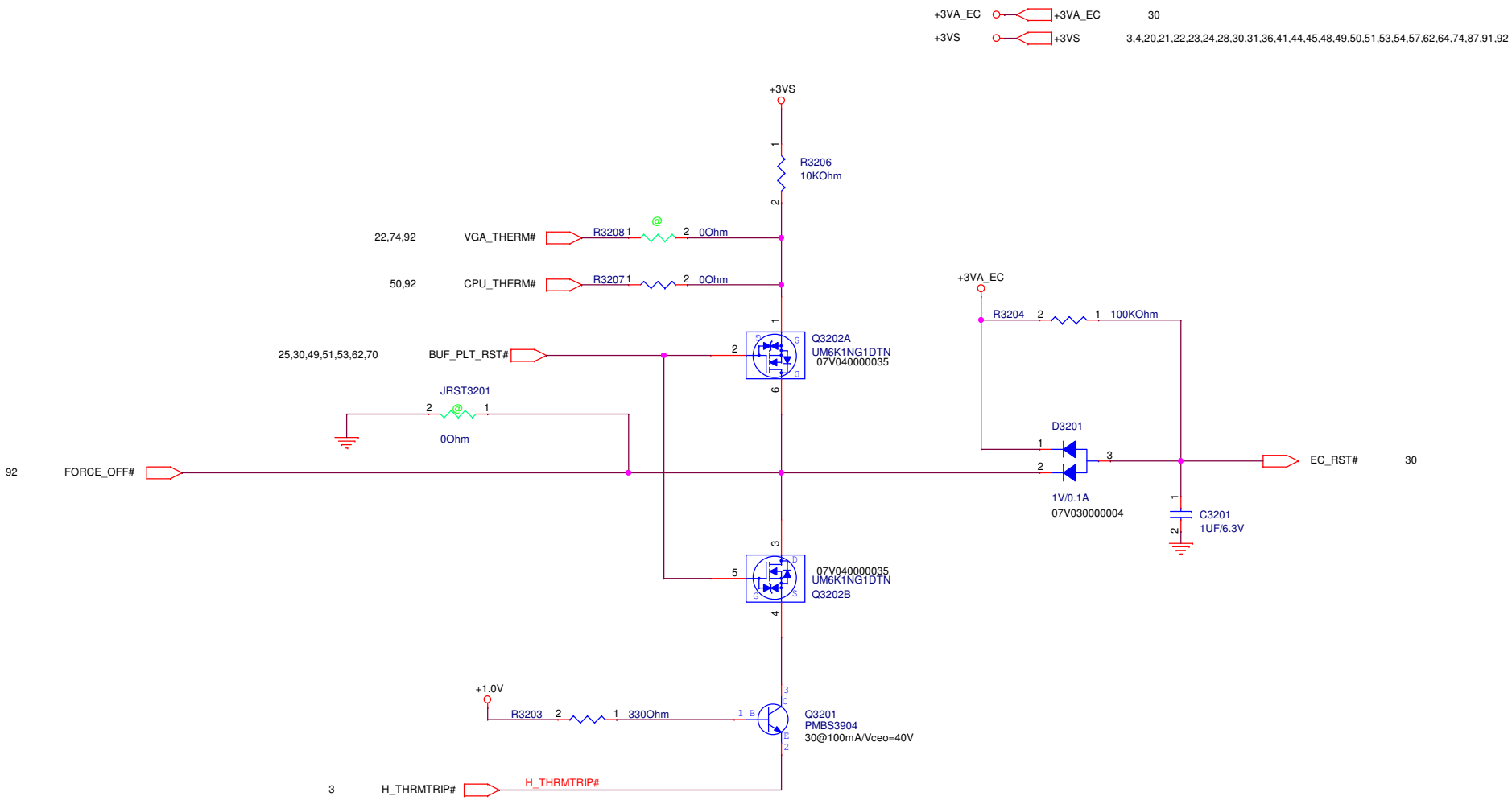

PEGATRON

PEGATRON PROPRIETARY AND CONFIDENTIAL

Title : RST_Reset Circuit

BG1-HW3 RD

Engineer: Andy2_Kao

Size	Project Name	Rev
B	BE5EA	1.0

Date: Thursday, May 11, 2017 Sheet 32 of 94

Title	<Title>
Size A	Document Number BE5EA
Rev	1.0
Date:	Thursday, May 11, 2017
Sheet	33 of 94

Title	<Title>	
Size A	Document Number BE5EA	Rev 1.0
Date: Thursday, May 11, 2017	Sheet 34 of 94	

Title	<Title>
Size A	Document Number BE5EA
Rev	1.0
Date:	Thursday, May 11, 2017
Sheet	35 of 94

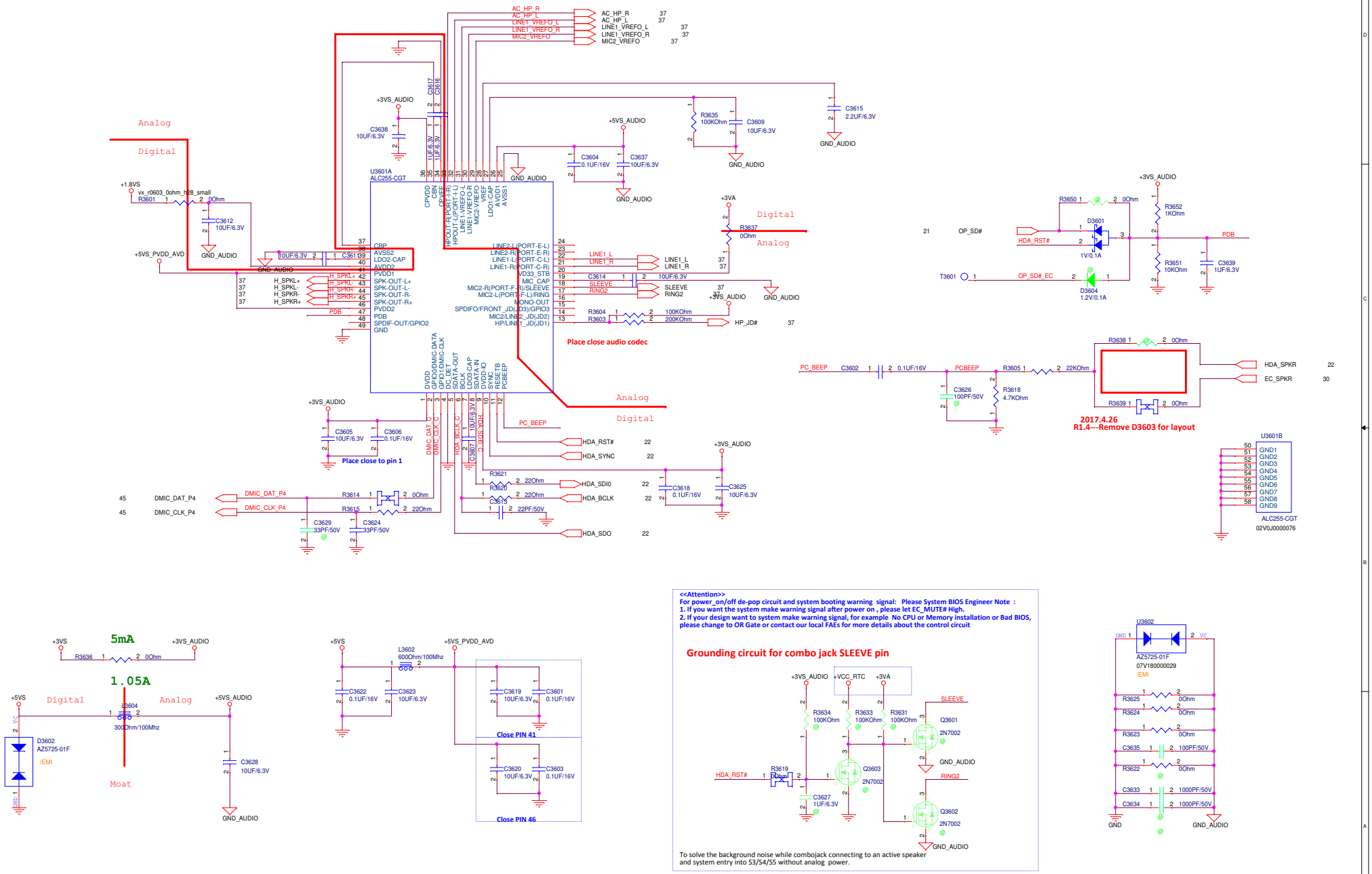

PEGATRON	Title : AUD_ALC255		
BG1-HW3 RD	Engineer: Andy2_Kao		
Size C	Project Name BE5EA		Rev 1.0
Date: Thursday, May 11, 2017	Sheet 36 of 94		

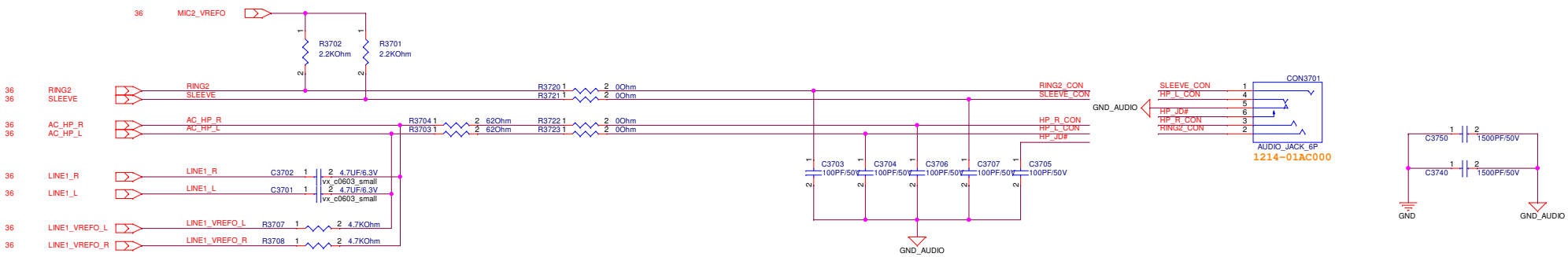

Internal Speaker

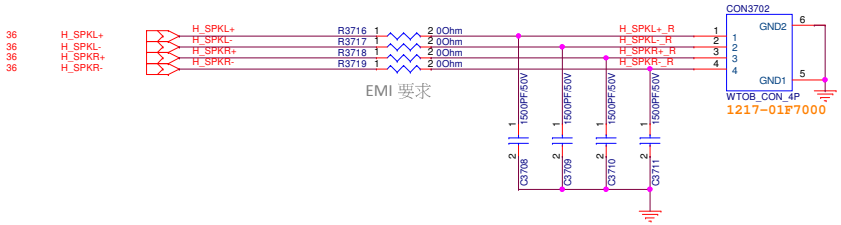

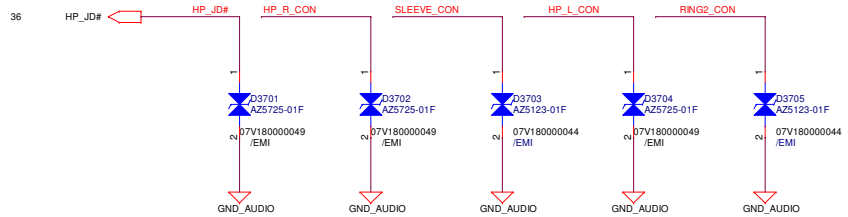

PEGATRON
PEGATRON PROPRIETARY AND CONFIDENTIAL
BG1-HW3 RD

Title : AUD_HP/DMIC/SPK

Engineer: Andy2_Kao

Size	Project Name	Rev
Custom	BE5EA	1.0

Date: Thursday, May 11, 2017 Sheet 37 of 94

Title	<Title>
Size A	Document Number BE5EA
Rev	1.0
Date:	Thursday, May 11, 2017
Sheet	38 of 94

Title	<Title>
Size A	Document Number BE5EA
Rev	1.0
Date:	Thursday, May 11, 2017
Sheet	39 of 94

Title	<Title>	
Size A	Document Number BE5EA	Rev 1.0
Date: Thursday, May 11, 2017	Sheet 40 of 94	

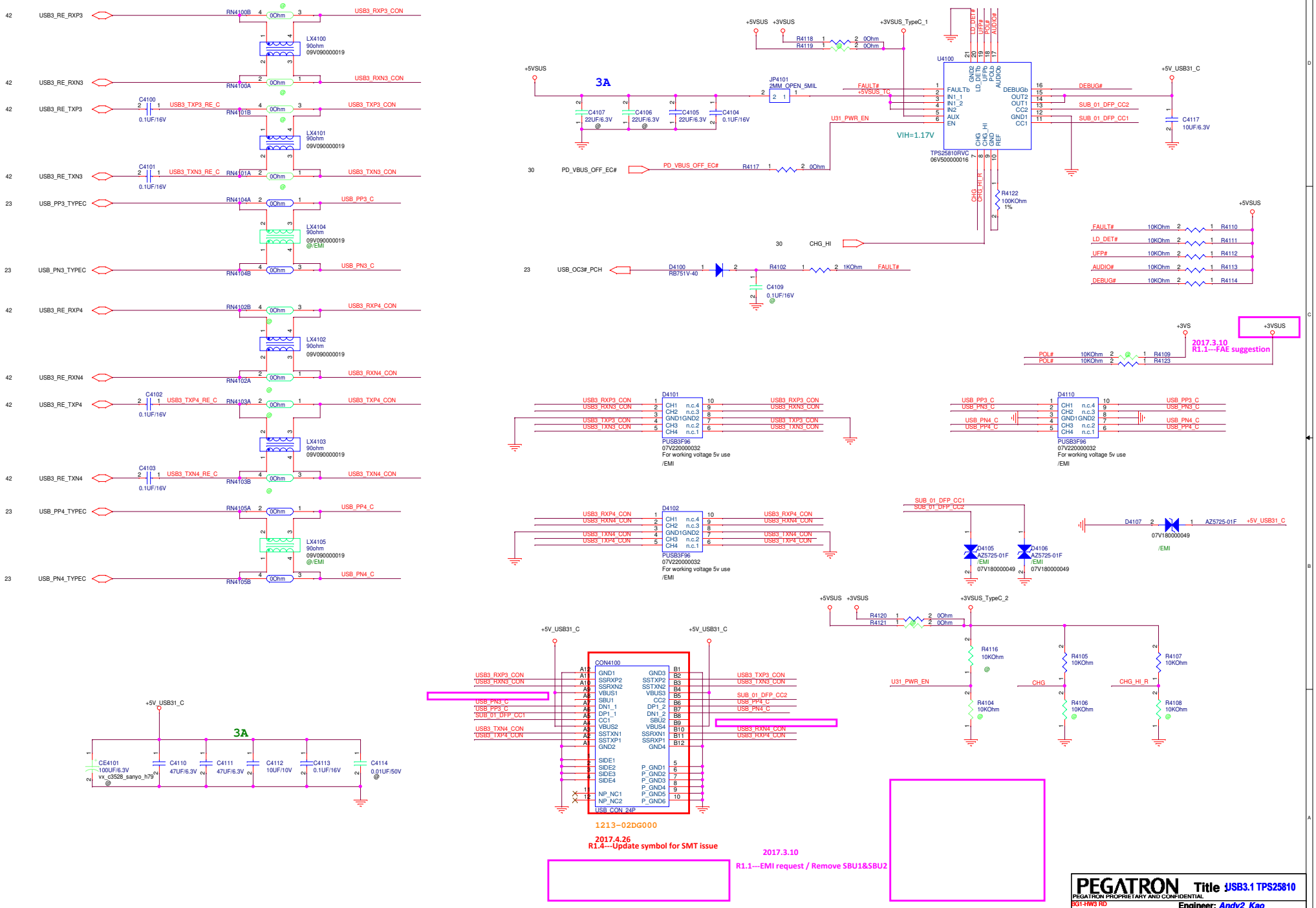

PEGATRON
PEGATRON PROPRIETARY AND CONFIDENTIAL

Title: USB3.1 TPS25810

BG1-HW3 RD

Engineer: Andy2_Kao

Size	Project Name	Rev
Custom	BE5EA	1.0

Date: Thursday, May 11, 2017 Sheet 41 of 94

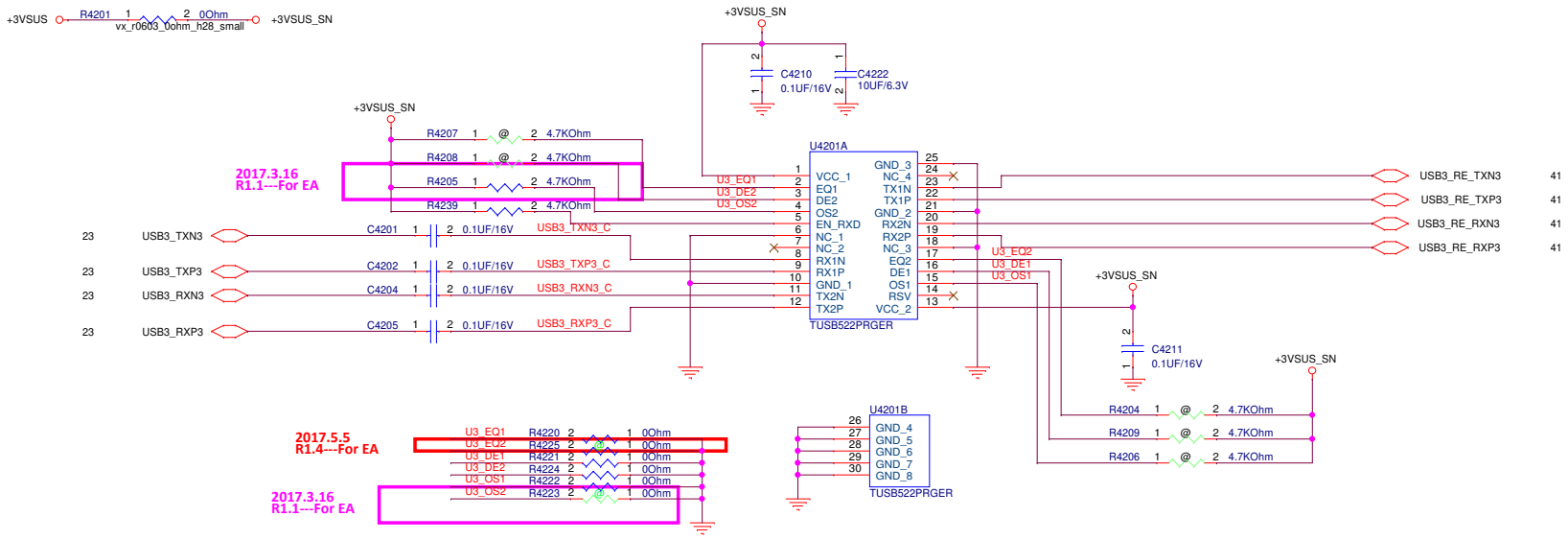

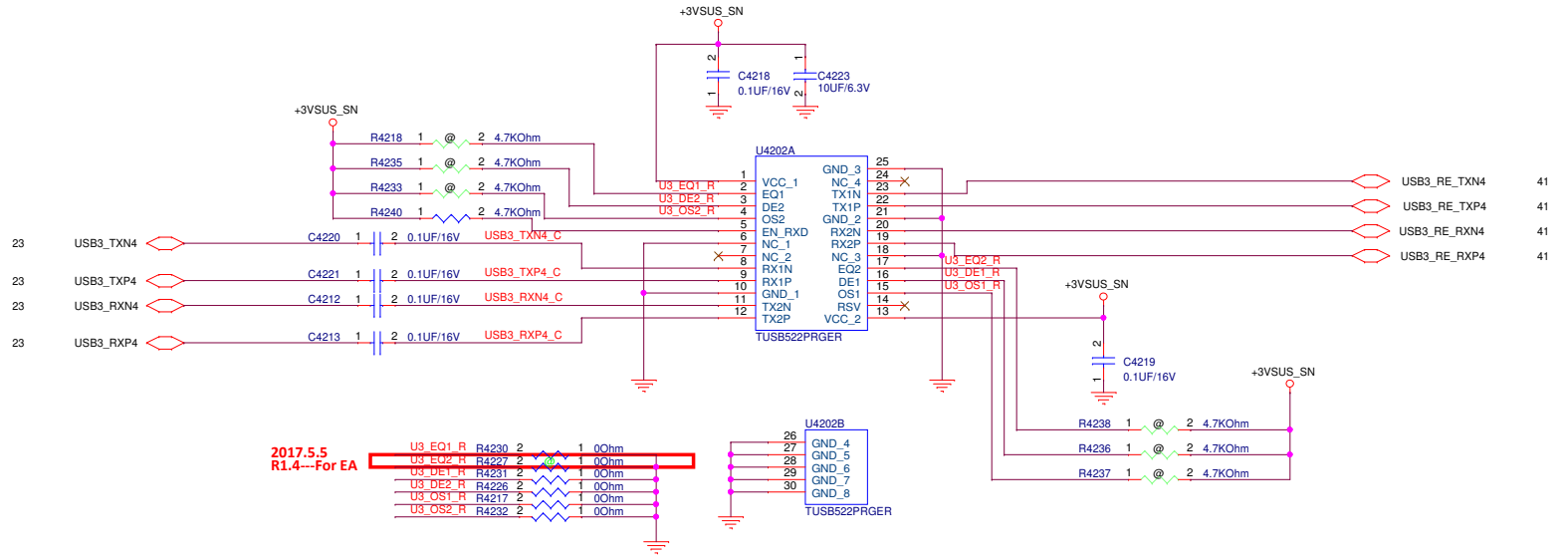

Defalut setting:

EQ1:3dB
EQ2:3dB
OS1:900mV
OS2:900mV
DE1:0dB
DE2:0dB

Equalizer control

EQ1/EQ2	Channel 1/Channel 2
L	3 dB
Mid	6 dB
H	9 dB

OS1/OS2	Channel 1/Channel 2
L	900mV
H	1100mV

De-emphasis control

DE1/DE2	OS1=0 /OS2=0	DE1/DE2	OS1=1 /OS2=1
L	0 dB	L	-2.6 dB
Mid	-3.5 dB	Mid	-5.9 dB
H	-6.2 dB	H	-8.3 dB

PEGATRON Title : USB3 repeater
PEGATRON PROPRIETARY AND CONFIDENTIAL
BG1-HW3 RD
Engineer: Andy2_Kao
Size Custom | Project Name BE5EA | Rev 1.0
Date: Thursday, May 11, 2017 | Sheet 42 of 94

Title	<Title>
Size A	Document Number BE5EA
Rev	1.0
Date:	Thursday, May 11, 2017
Sheet	43 of 94

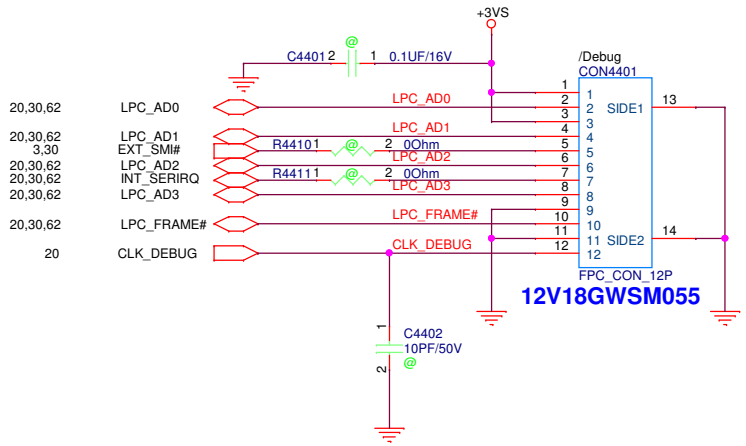

PEGATRON

PEGATRON PROPRIETARY AND CONFIDENTIAL

Title : DEBUG CONN.

BG1-HW3 RD

Engineer: Andy2_Kao

Size	Project Name	Rev
B	BE5EA	1.0

Date: Thursday, May 11, 2017 Sheet 44 of 94

Controller circuit

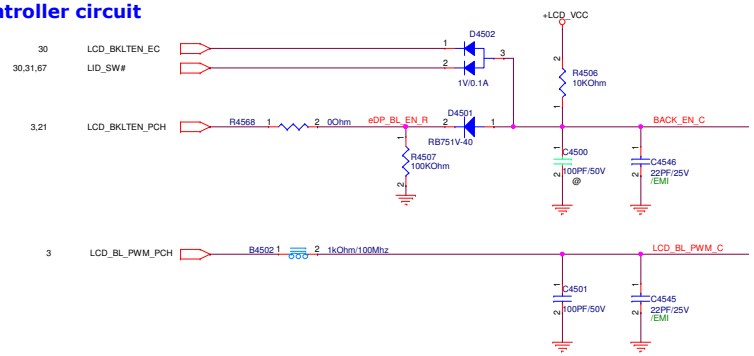

LCD_VCC for eDP

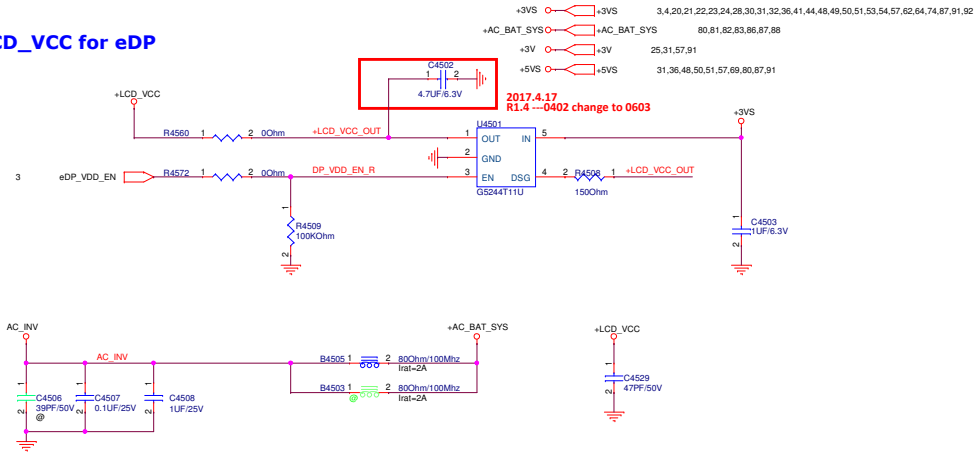

Camera

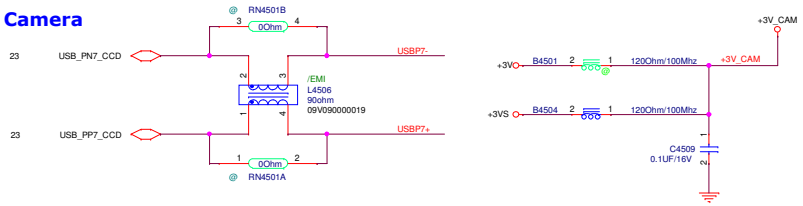

eDP HPD

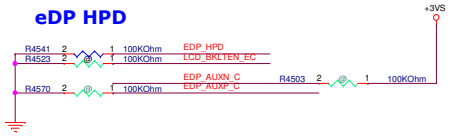

Touch panel

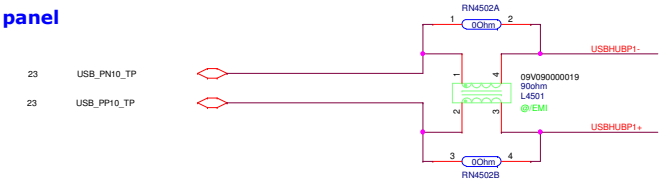

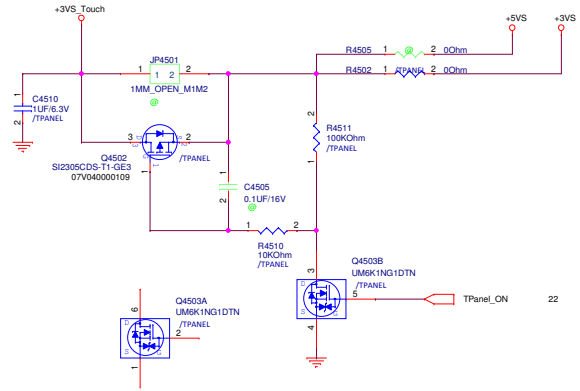

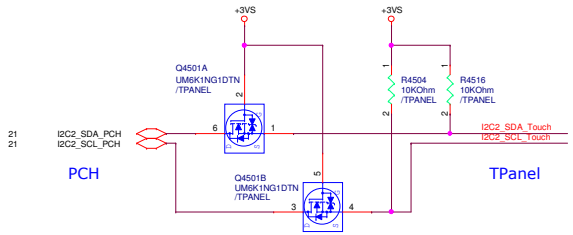

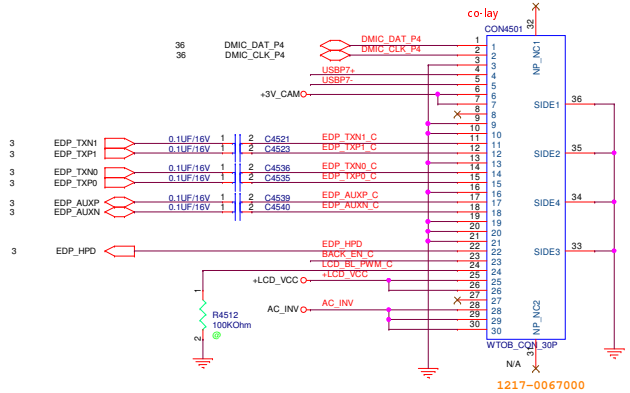

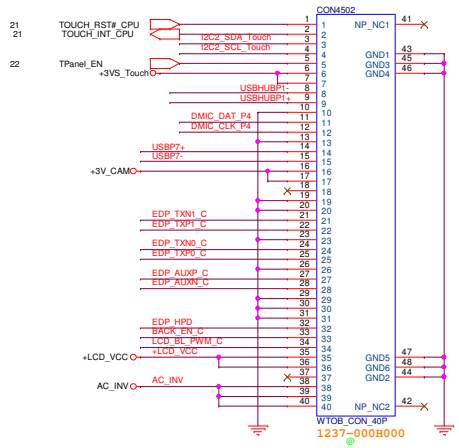

PEGATRON Title : LVDS Out

PEGATRON PROPRIETARY AND CONFIDENTIAL

BG1-HW3 RD Engineer: Andy2_Kao

Size	Project Name	Rev
Custom	BE5EA	1.0

Date: Thursday, May 11, 2017 Sheet 45 of 94

Title	<Title>
Size A	Document Number BE5EA
Rev	1.0
Date:	Thursday, May 11, 2017
Sheet	46 of 94

Title	<Title>
Size A	Document Number BE5EA
Rev	1.0
Date:	Thursday, May 11, 2017
Sheet	47 of 94

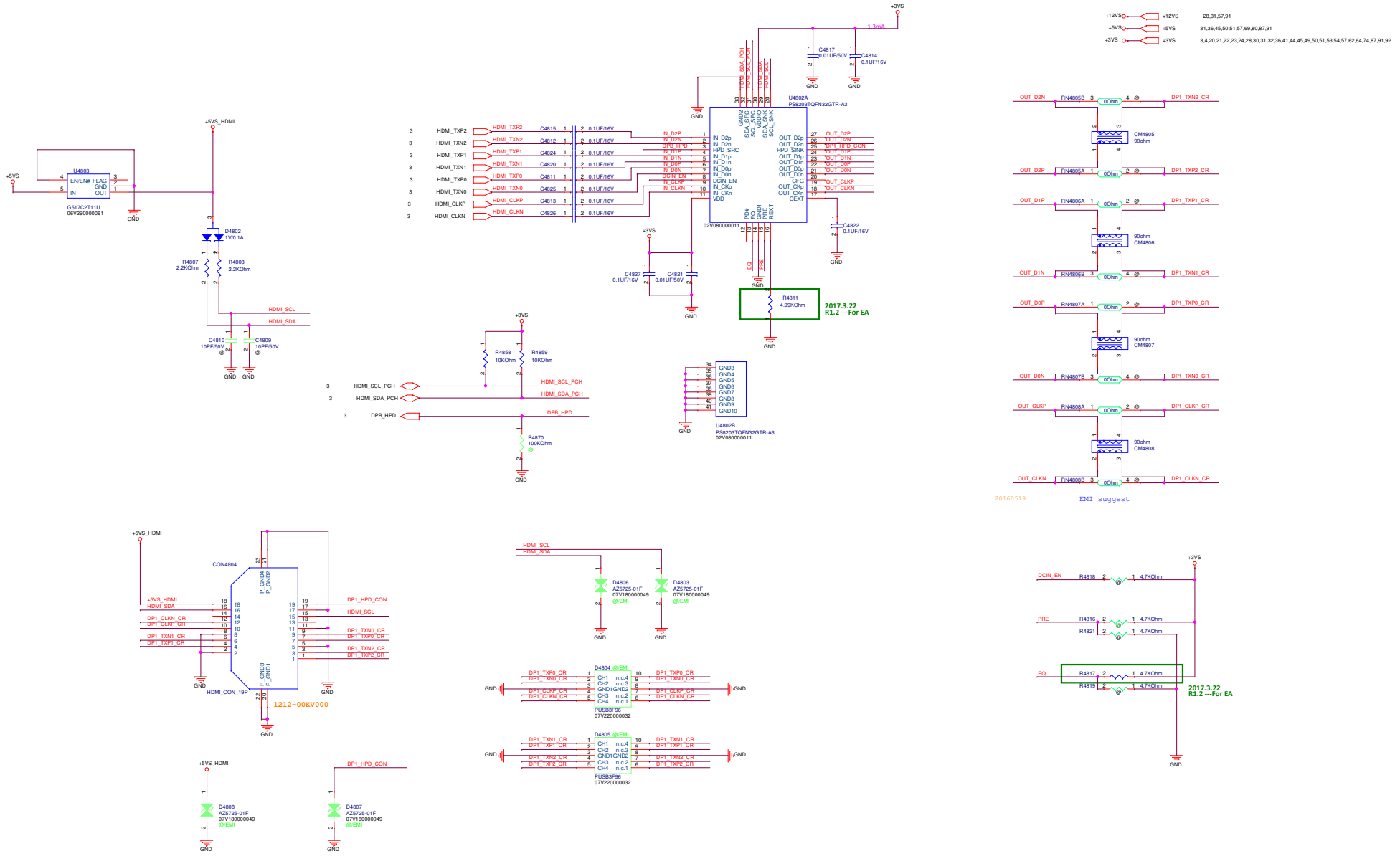

<Variant Name>

PEGATRON Title : HDMI-4K2K

PEGATRON PROPRIETARY AND CONFIDENTIAL

BG1-HW3 RD Engineer: Andy2_Kao

Size	Project Name	Rev
Custom	BE5EA	1.0

Date: Thursday, May 11, 2017 Sheet 48 of 94

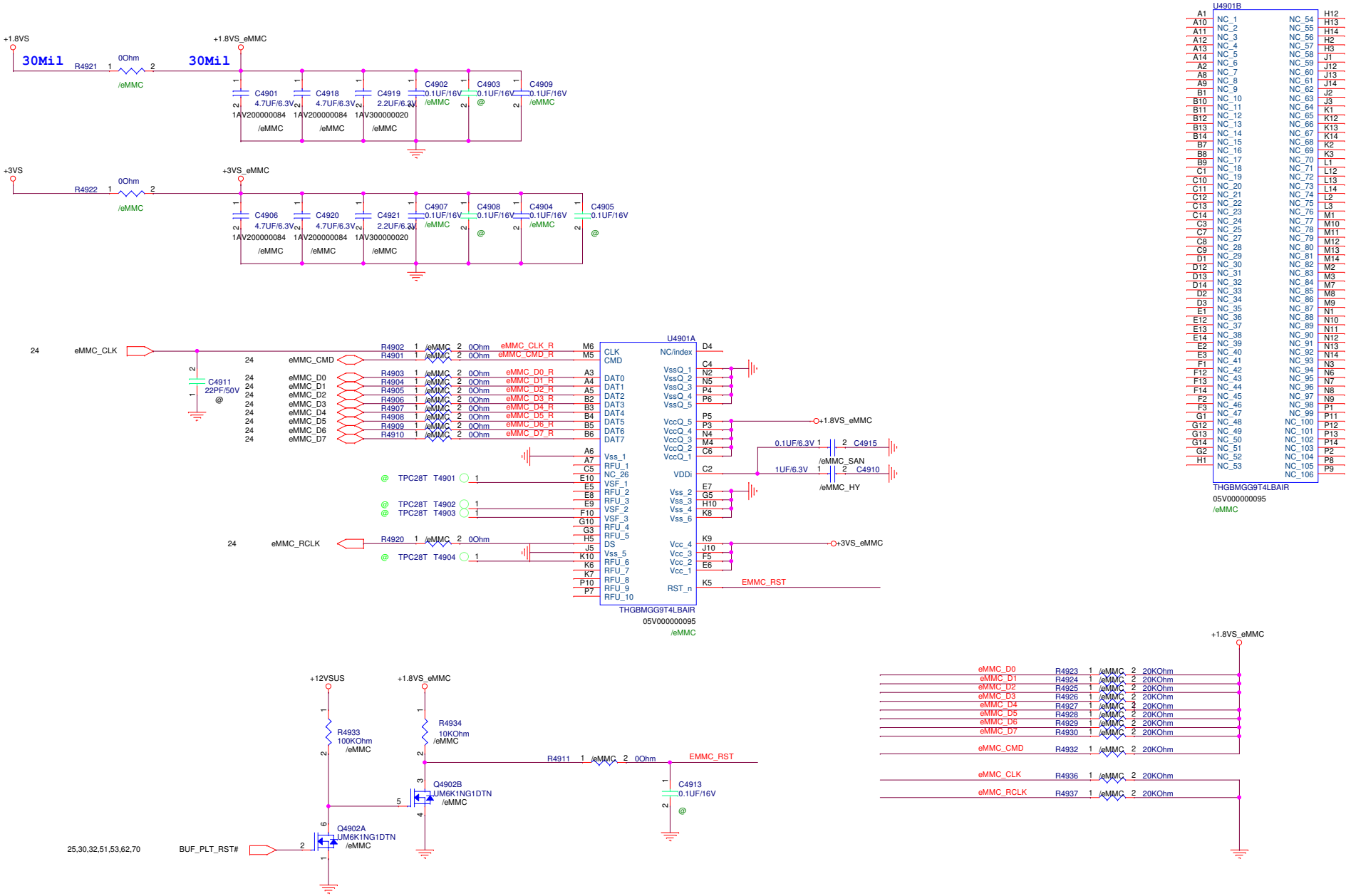

<Variant Name>

PEGATRON	Title : eMMC	
BG1-HW3 RD	Engineer: Andy2_Kao	
Size: Custom	Project Name: BE5EA	Rev: 1.0
Date: Thursday, May 11, 2017	Sheet 49 of 94	

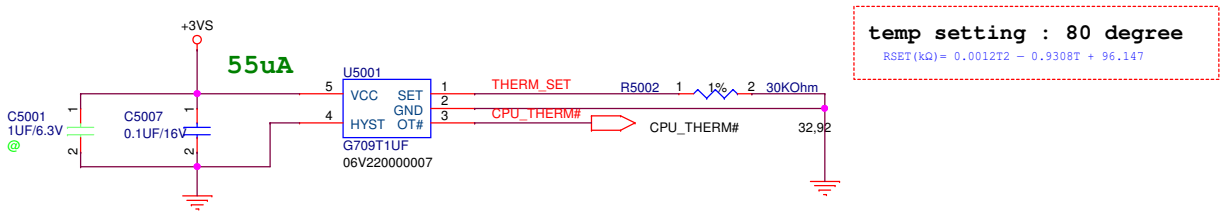

temp setting : 80 degree

RSET(kΩ)= 0.0012T2 – 0.9308T + 96.147

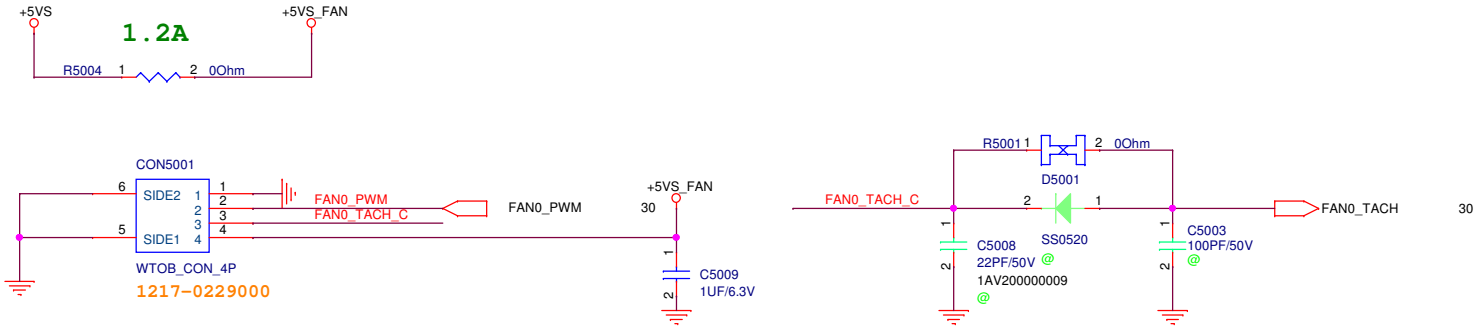

PEGATRON	Title : Thermal_Fan	
BG1-HW3 RD	Engineer: Andy2_Kao	
Size: B	Project Name: BE5EA	Rev: 1.0
Date: Thursday, May 11, 2017	Sheet 50 of 94	

SATA re-driver

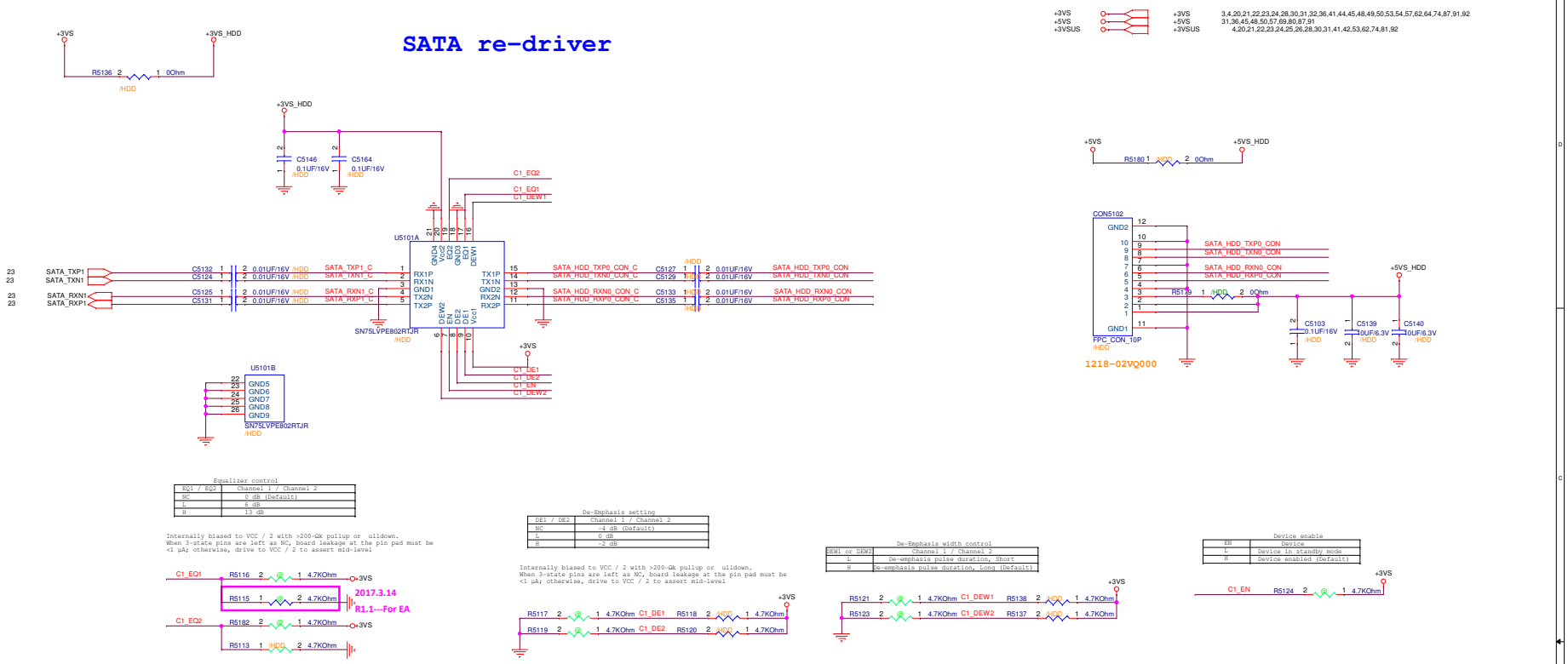

Equalizer control

EQ1 / EQ2	Channel 1 / Channel 2
NC	0 dB (Default)
L	6 dB
H	13 dB

Internally biased to VCC / 2 with >200-Gk pullup or ulldown.
When 3-state pins are left as NC, board leakage at the pin pad must be <1 µA; otherwise, drive to VCC / 2 to assert mid-level

De-Emphasis setting

DE1 / DE2	Channel 1 / Channel 2
NC	-4 dB (Default)
L	0 dB
H	-2 dB

Internally biased to VCC / 2 with >200-Gk pullup or ulldown.
When 3-state pins are left as NC, board leakage at the pin pad must be <1 µA; otherwise, drive to VCC / 2 to assert mid-level

De-Emphasis width control

DEW1 or DEW2	Channel 1 / Channel 2
L	De-emphasis pulse duration, Short
H	De-emphasis pulse duration, Long (Default)

Device enable

EN	Device
L	Device in standby mode
H	Device enabled (Default)

SSD

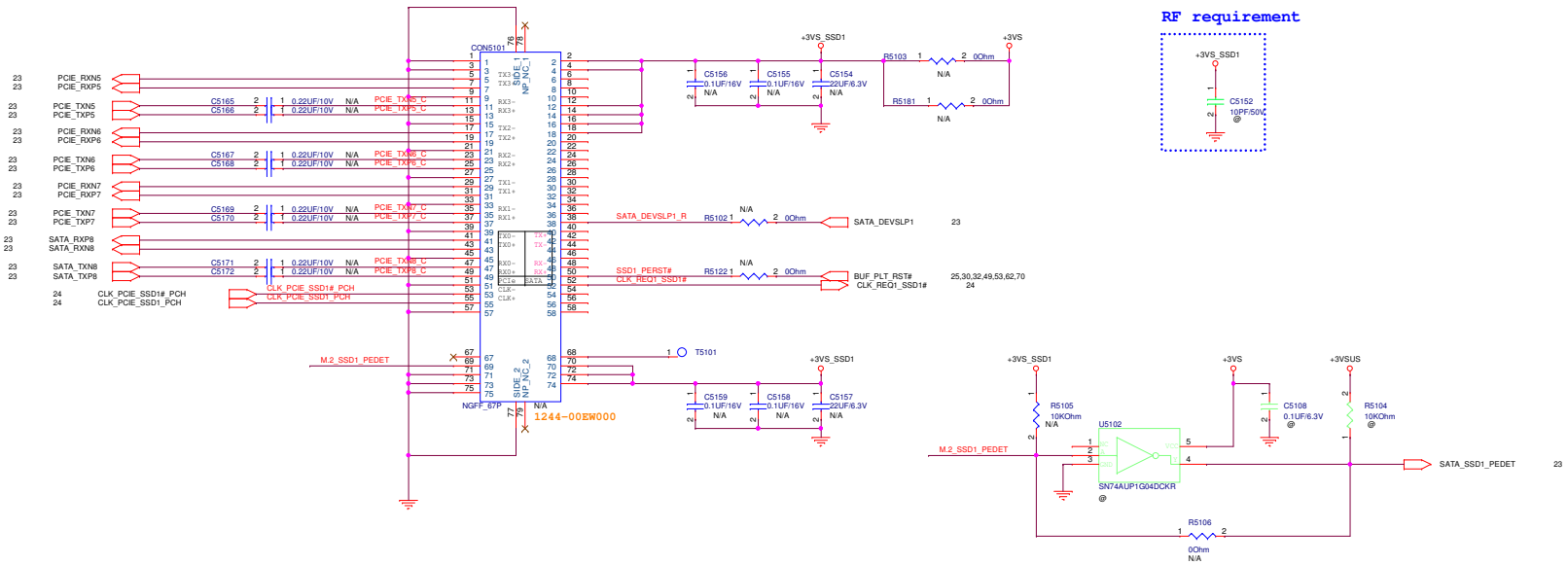

RF requirement

PEGATRON
PEGATRON PROPRIETARY AND CONFIDENTIAL
Title: SATA SSD_HDD
SG1-HW3 RD
Engineer: Andy2_Kao
Size: Custom
Project Name: BE5EA
Rev: 1.0
Date: Thursday, May 11, 2017
Sheet 51 of 94

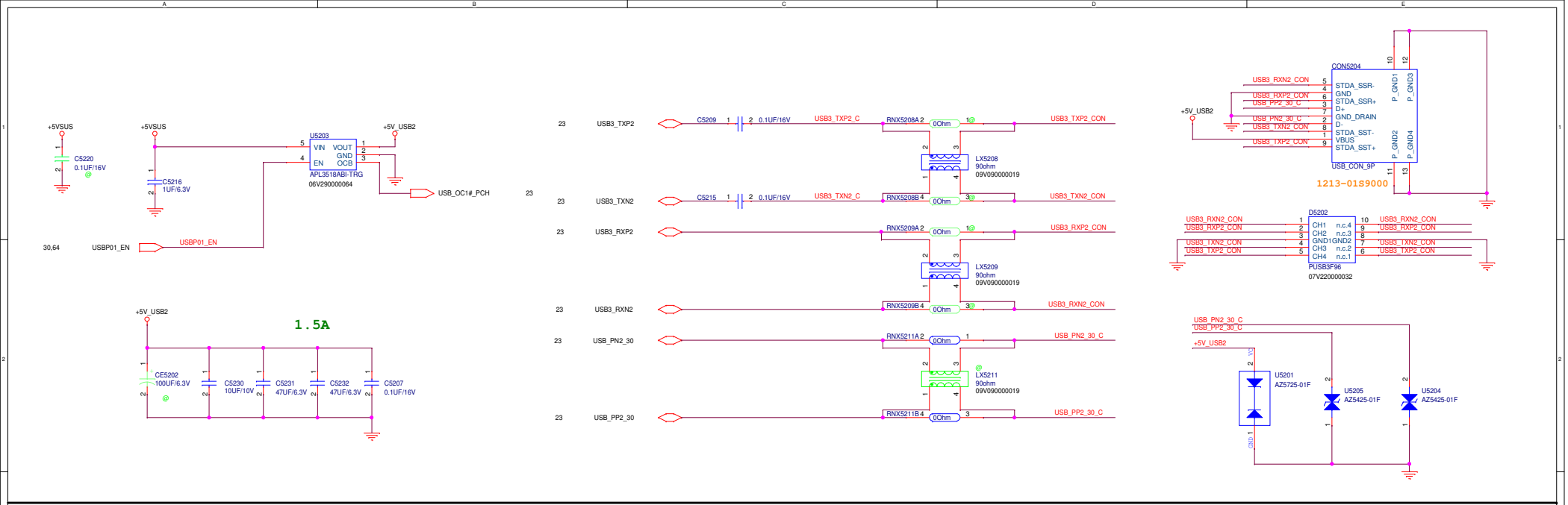

USB 3.0 ports x 1 with Sleep & Charge Left_Down

Device	Pega No.	VX No.
SLGC55544CVTR	0629-00TJ000	06V290000089 (Default)

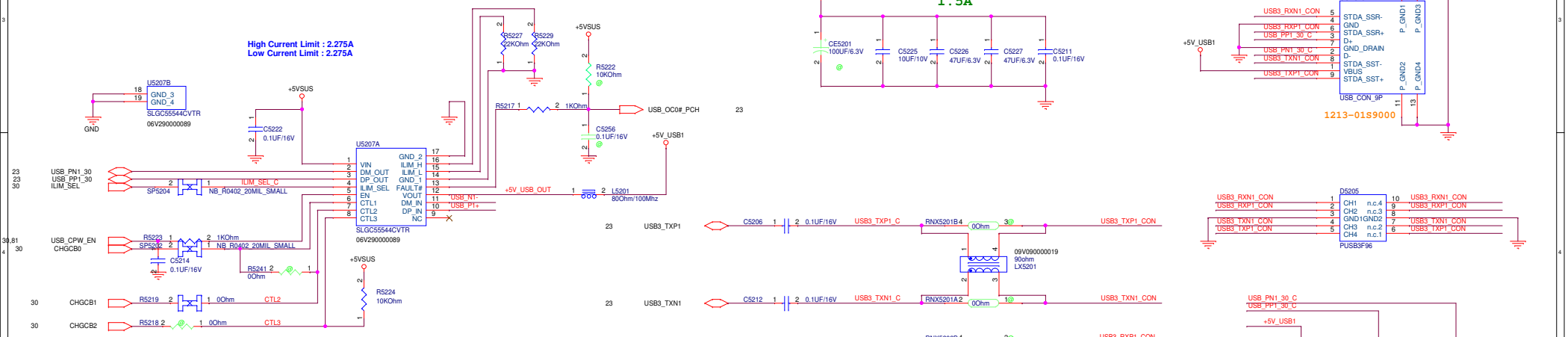

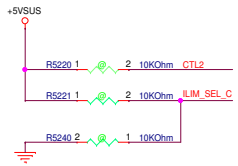

System Global Power State	TPS2544 Charging Mode	CTL1	CTL2	CTL3	ILIM_SEL	Current Limit Setting
S0	SDP (Standard Downstream)	1	1	0	1 or 0	ILIM_HI / ILIM_LO
S0	SDP, no discharge to / from CDP	1	1	1	0	ILIM_LO
S0	CDP, if a BC1.2 primary detection occurs	1	1	1	1	ILIM_HI
S3/S4/S5	Auto mode, no mouse wake	0	0	1	0	ILIM_HI
S3	Dedicated Charging Port Auto mode,	0	1	1	X	ILIM_HI
S3	SDP, keyboard/ mouse wake-up	0	1	0	1 or 0	ILIM_HI / ILIM_LO

PEGATRON
PEGATRON PROPRIETARY AND CONFIDENTIAL
Title USB3.0_Charge IC
BG1-HW3 RD
Engineer: Andy2_Kao

Size	Project Name	Rev
C	BE5EA	1.0

Date: Thursday, May 11, 2017 Sheet 52 of 94

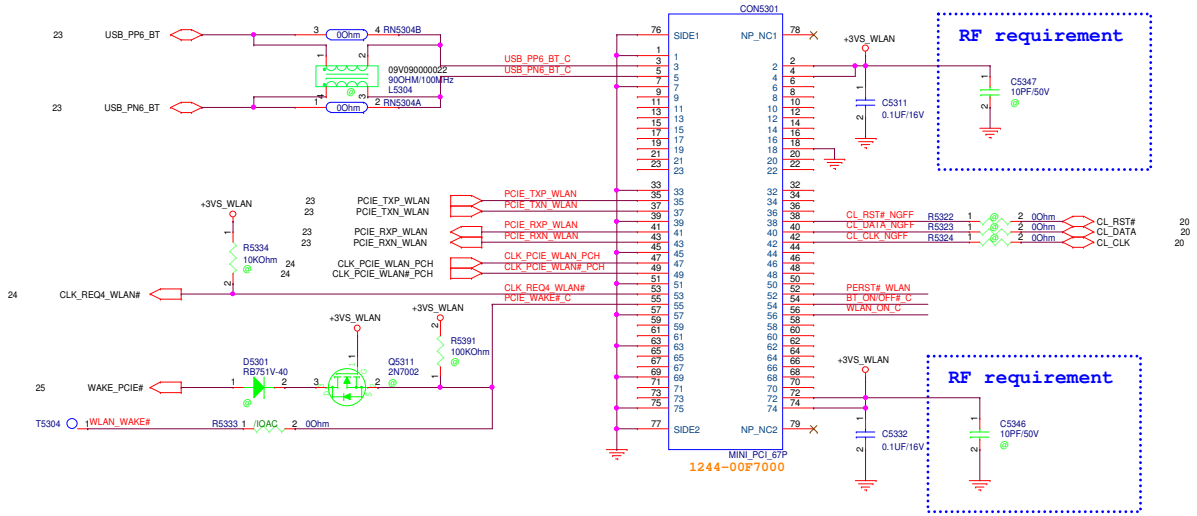

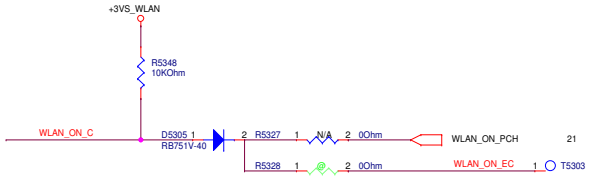

+3V_WLAN_WP1 bypass capactor:

Place 0.1UF near pin 2,4

Place 10UF near +3V_WLAN_WP1 source side.

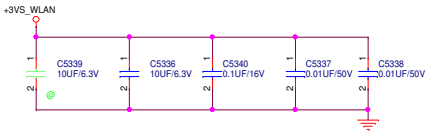

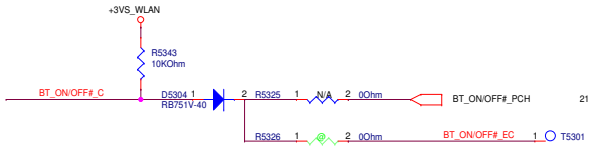

Place 0.1UF near pin 72,74.

Place 10UF near +3V_WLAN_WP1 source side.

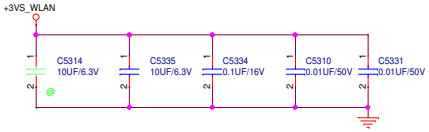

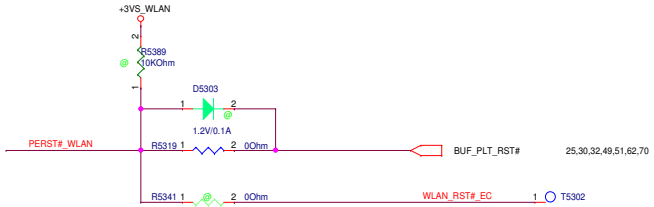

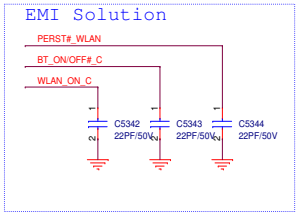

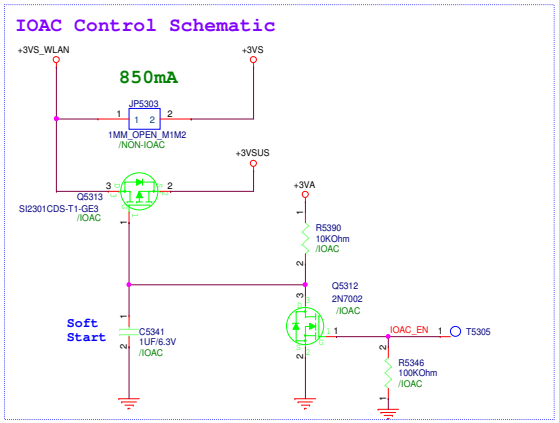

PEGATRON Title : PCIE_WLAN_BT

PEGATRON PROPRIETARY AND CONFIDENTIAL

BG1-HW3 RD

Engineer: Andy2_Kao

Size	Project Name	Rev
C	BE5EA	1.0

Date: Thursday, May 11, 2017 Sheet 53 of 94

2017.5.5
R1.5 ---Add G-sensor

HDD G-Sensor

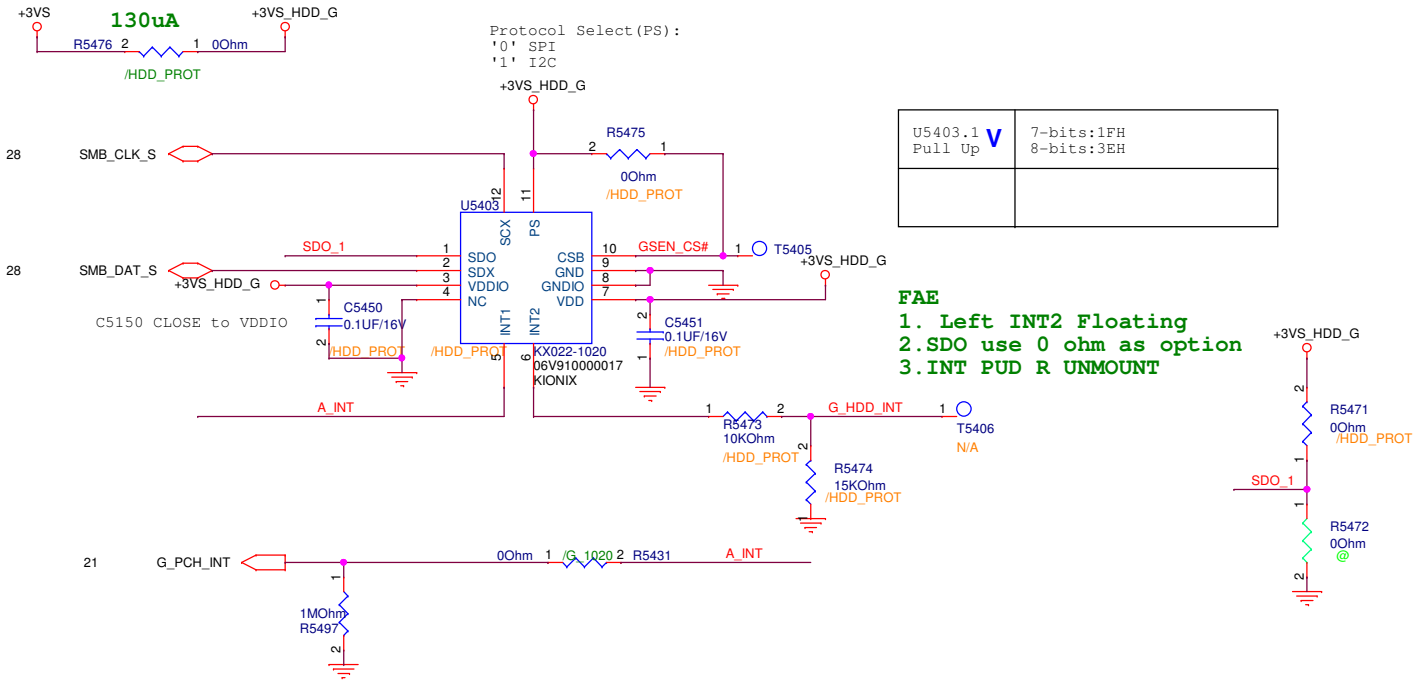

U5403.1 Pull Up V	7-bits:1FH 8-bits:3EH

FAE
1. Left INT2 Floating
2.SDO use 0 ohm as option
3.INT PUD R UNMOUNT

PEGATRON
PEGATRON PROPRIETARY AND CONFIDENTIAL
BG1-HW3 RD

Title : G-Sensor
Engineer: Andy2_Kao

Size	Project Name	Rev
B	BE5EA	1.0

Date: Thursday, May 11, 2017 Sheet 54 of 94

Title	<Title>
Size A	Document Number BE5EA
Rev	1.0
Date:	Thursday, May 11, 2017
Sheet	55 of 94

PEGATRON

PEGATRON PROPRIETARY AND CONFIDENTIAL

001-HW3 HD

Title: SATA SSD_HDD

Engineer: Andy2_Kao

Size	Project Name	Rev
D	BE5EA	1.0

Date: Thursday, May 11, 2017 Sheet 56 of 94

+3VA	+3VA	24,28,30,31,36,53,67,81,88,93
+5VS	+5VS	31,36,45,48,50,51,69,80,87,91
+3VS	+3VS	3,4,20,21,22,23,24,28,30,31,32,36,41,44,45,48,49,50,51,53,54,62,64,74,87,91,92
+VCCIO	+VCCIO	3,5,7,9,91
+0.6VS	+0.6VS	15,83
+1.8VS	+1.8VS	21,36,49,91
+12VS	+12VS	28,31,91
+12V	+12V	91
+3V	+3V	25,31,45,91
+1.0V	+1.0V	3,5,7,9,25,32,91
+2P5VPP	+2P5VPP	16,17,85
+1.2V	+1.2V	4,7,15,16,17,19,83
+1V8_AON	+1V8_AON	70,72,74,75,87,90,91
+1V8_MAIN	+1V8_MAIN	70,71,72,74,75,91
+3V3_MAIN	+3V3_MAIN	74,85,91
+NVVDD	+NVVDD	75,87
+FBVDDQ	+FBVDDQ	71,75,76,77,86
+PEX_VDD	+PEX_VDD	70,71,72,85

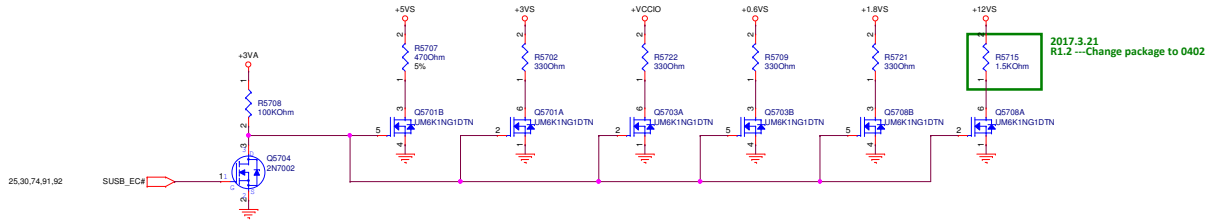

2017.3.21
R1.2 ---Change package to 0402

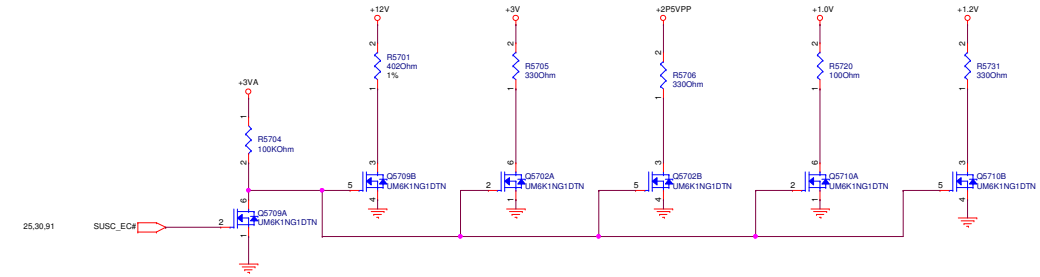

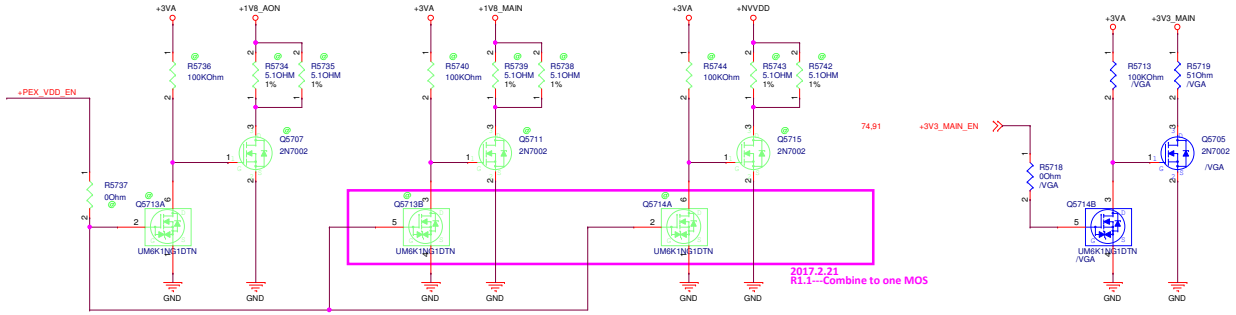

2017.2.21
R1.1---Combine to one MOS

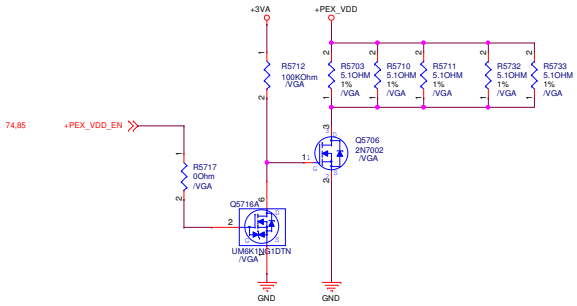

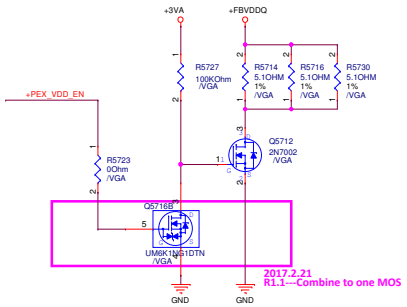

2017.2.21
R1.1---Combine to one MOS

PEGATRON
PEGATRON PROPRIETARY AND CONFIDENTIAL

Title : DISCHARGE

BG1-HW3 RD

Engineer: Andy2_Kao

Size	Project Name	Rev
Custom	BE5EA	1.0

Date: Thursday, May 11, 2017 Sheet 57 of 94

Title	<Title>	
Size A	Document Number BE5EA	Rev 1.0
Date: Thursday, May 11, 2017	Sheet 58 of 94	

Title	<Title>
Size A	Document Number BE5EA
Rev	1.0
Date:	Thursday, May 11, 2017
Sheet	59 of 94

DC Jack WTB CONN

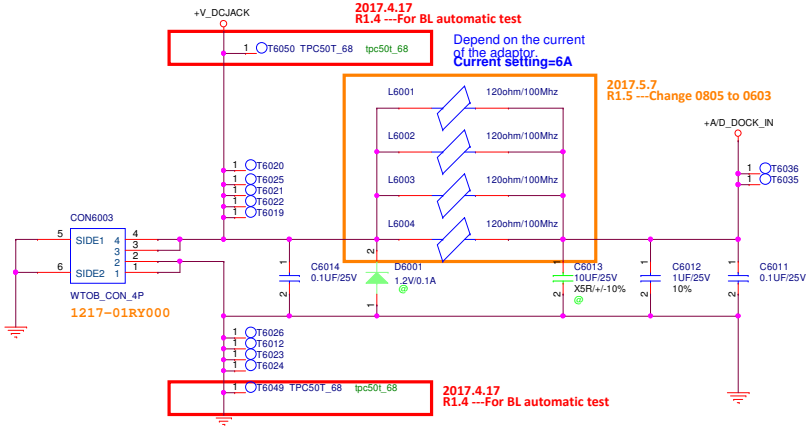

Battery Connector

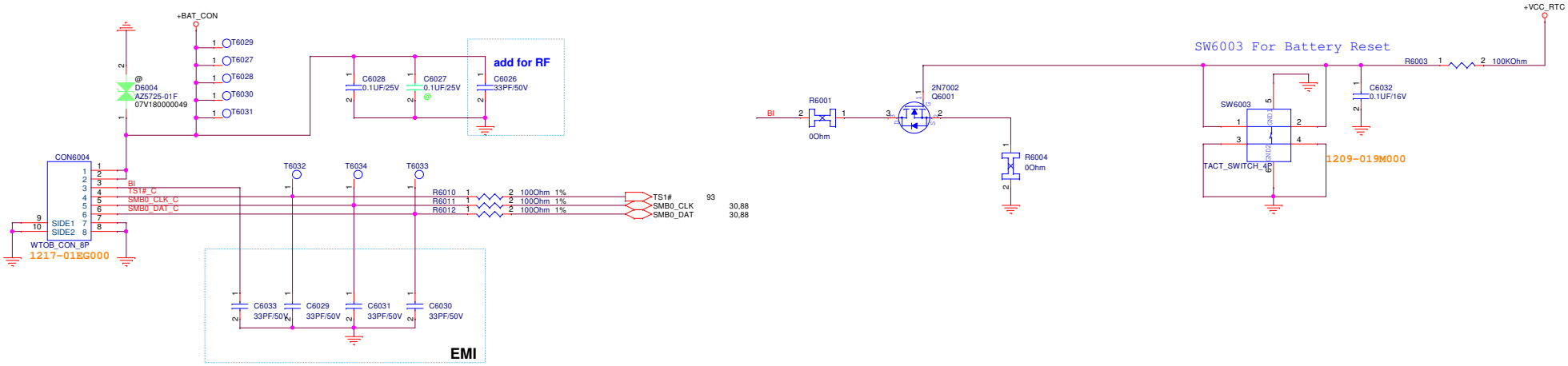

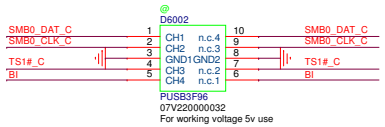

PEGATRON	Title : DC_BAT_CONN	
BG1-HW3 RD	Engineer: Andy2_Kao	
Size: Custom	Project Name: BE5EA	Rev: 1.0
Date: Thursday, May 11, 2017	Sheet 60 of 94	

Title	<Title>		
Size A	Document Number BE5EA		Rev 1.0
Date: Thursday, May 11, 2017		Sheet 61 of 94	

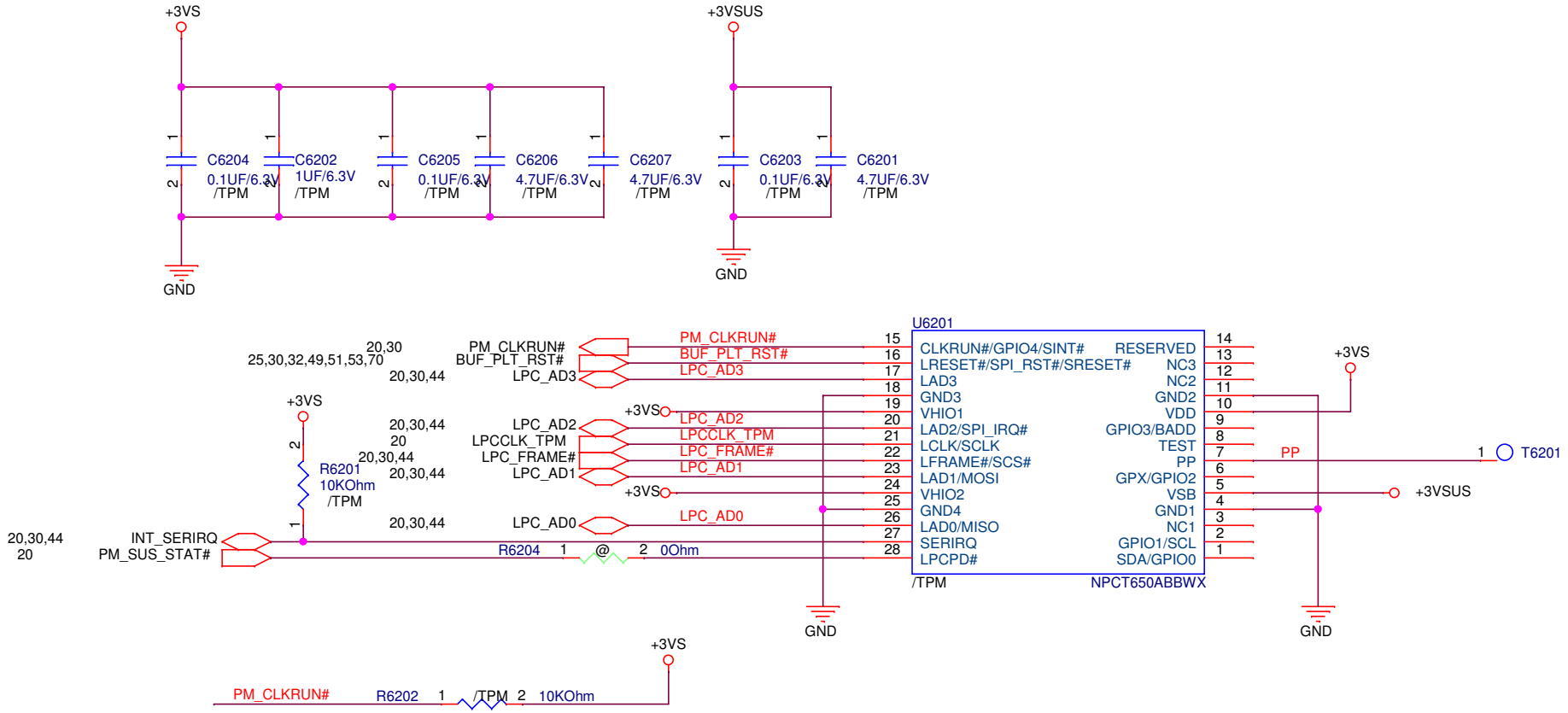

PEGATRON

Title : TPM NPCT650

BG1-HW3 RD

Engineer: Andy2_Kao

Size	Project Name	Rev
Custom	BE5EA	1.0

Date: Thursday, May 11, 2017 Sheet 62 of 94

<Variant Name>

PEGATRON

PEGATRON PROPRIETARY AND CONFIDENTIAL

Title : USB 2.0 Hub

Engineer: Andy2_Kao

Size	Project Name	Rev
A	BE5EA	1.0

Date: Thursday, May 11, 2017 Sheet 63 of 94

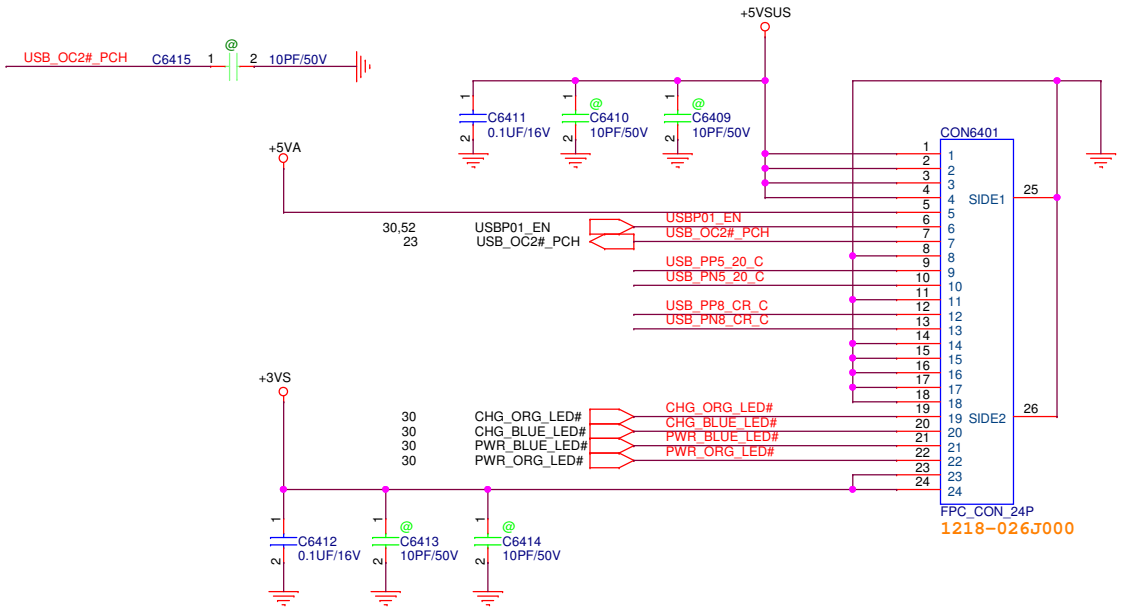

DB Connector Pin Define(MB Side)

1		+5VSUS
2		+5VSUS
3		+5VSUS
4		+5VSUS
5		+5VA
6		USB_EN
7		USB_OC
8	GND_IO	
9		USB_PP1_20
10		USB_PN1_20
11	GND_IO	
12		USB_PP2_20
13		USB_PN2_20
14	GND_IO	
15	GND_IO	
16	GND_IO	
17	GND_IO	
18	GND_IO	
19		CHG_ORG_LED#
20		CHG_BLUE_LED#
21		PWR_BLUE_LED#
22		PWR_ORG_LED#
23		+3VS
24		+3VS

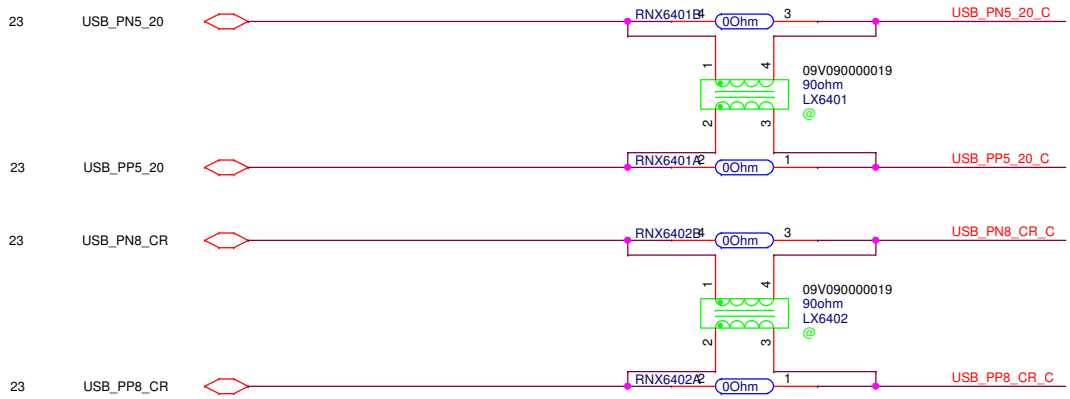

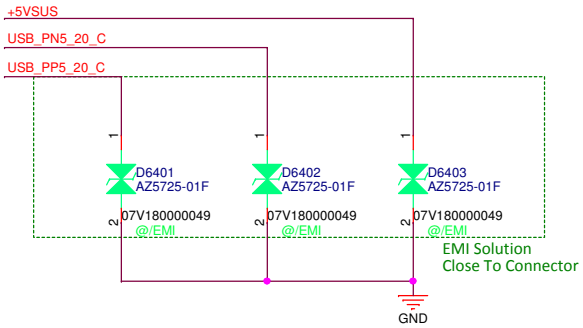

PEGATRON **Title :** IO Board

BG1-HW3 RD **Engineer:** *Andy2_Kao*

Size	Project Name	Rev
B	BE5EA	1.0

Date: Thursday, May 11, 2017 Sheet 64 of 94

<Variant Name>

PEGATRON

PEGATRON PROPRIETARY AND CONFIDENTIAL

Title : G-Sensor

Engineer: Andy2_Kao

Size	Project Name	Rev
A	BE5EA	1.0

Date: Thursday, May 11, 2017 Sheet 65 of 94

66 IO Board

Card Reader

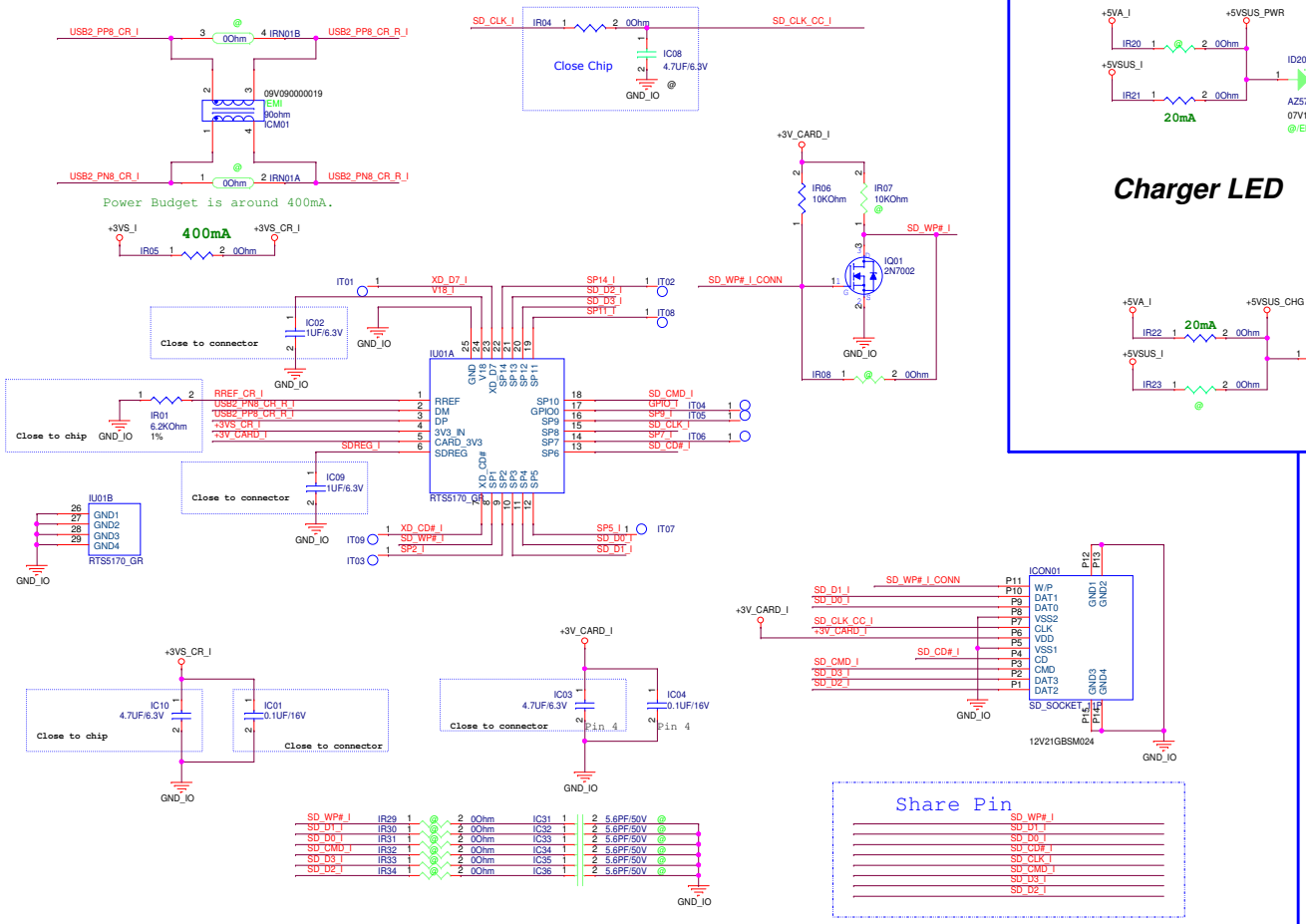

POWER LED

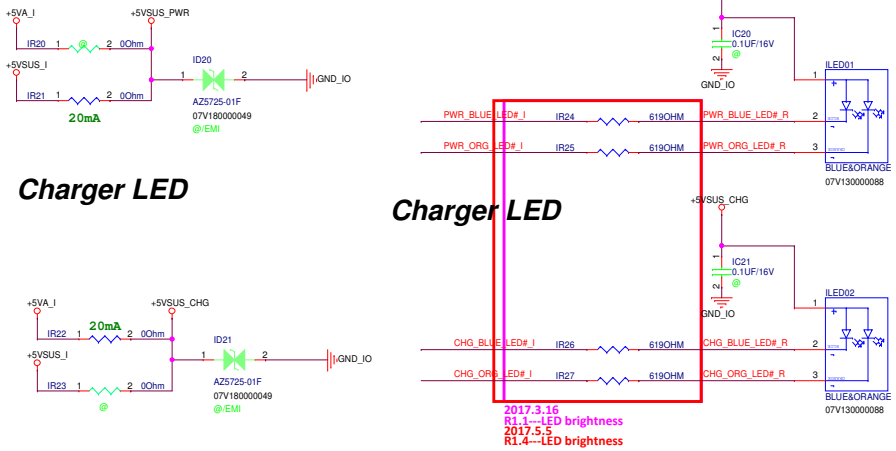

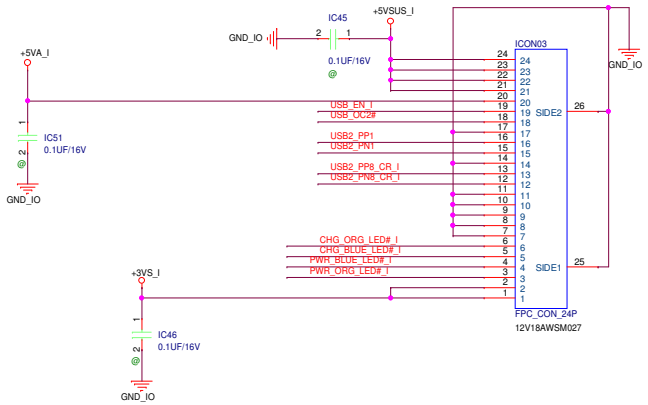

USB 2.0

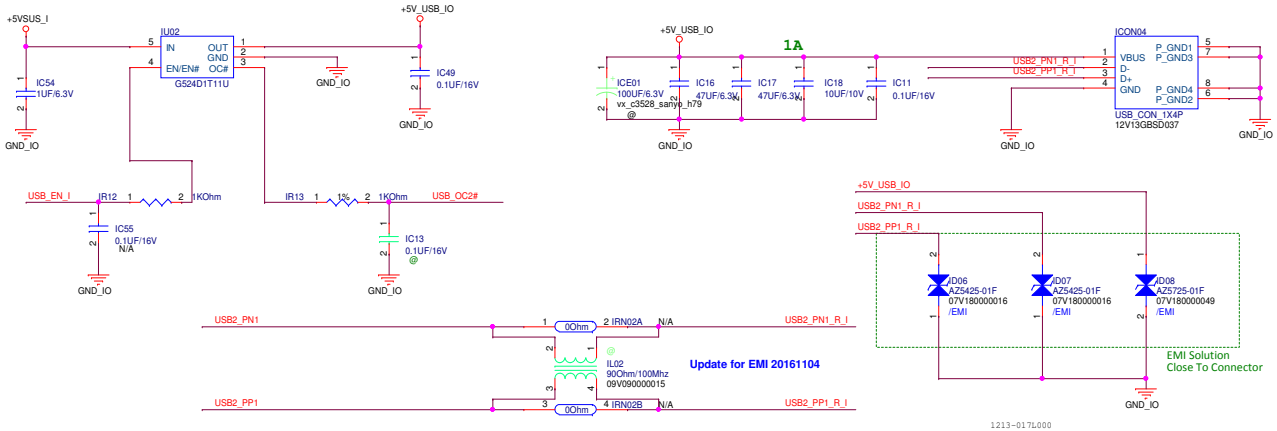

PEGATRON Title : IO Board

PEGATRON PROPRIETARY AND CONFIDENTIAL

BG1-HW3 RD Engineer: Joe_Lo

Size	Project Name	Rev
C	BE5EA	1.0

Date: Thursday, May 11, 2017 Sheet 66 of 94

1213-017L000

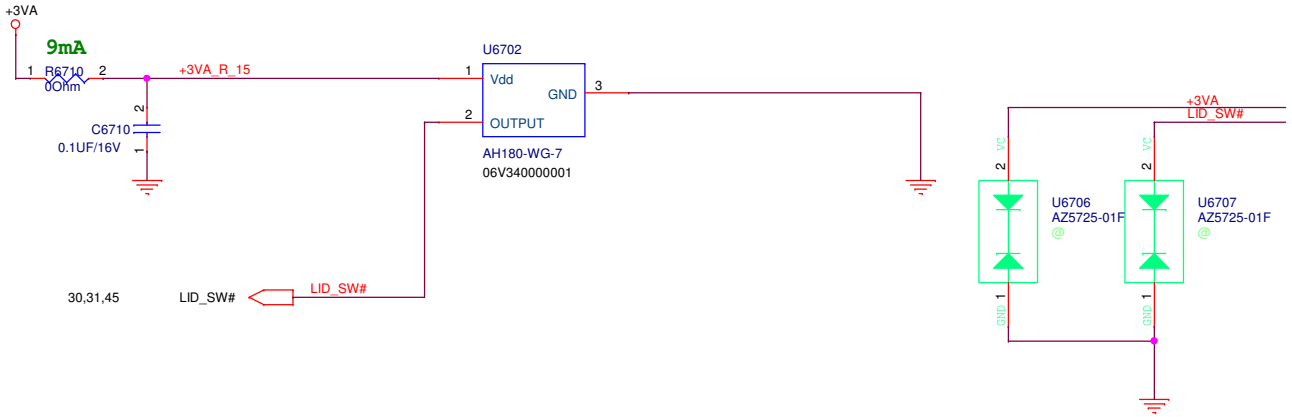

PEGATRON
PEGATRON PROPRIETARY AND CONFIDENTIAL

Title : Sensor Board

BG1-HW3 RD

Engineer: Andy2_Kao

Size	Project Name	Rev
B	BE5EA	1.0

Date: Thursday, May 11, 2017 Sheet 67 of 94

68 ME Hole

鎖IOPORT SHIELDING螺絲孔(Screw G)

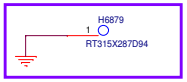

2017.3.27
R1.3---For ME

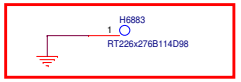

2017.4.26
R1.4---For BL

2.5X3.0 NPTH(Screw H)

6mm NPTH(Screw E,K)

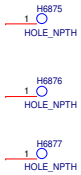

CPU NUT(Screw A1)

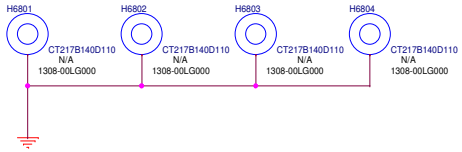

鎖SSD螺絲孔(Screw NUT)

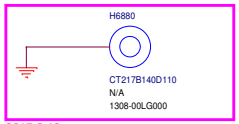

2017.3.13
R1.1---For ME

2.5 NPTH(Screw P)

2017.3.9
R1.1---For ME

GPU NUT(Screw B1)

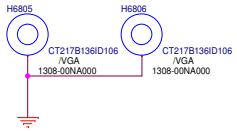

Audio Jack下孔(screw J)

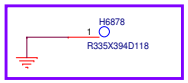

2017.3.28
R1.3---For ME

斷熱孔(Screw C)

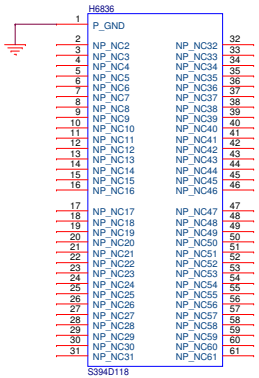

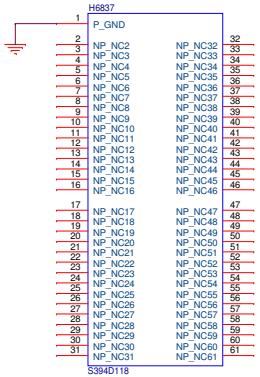

Main Shielding NUT

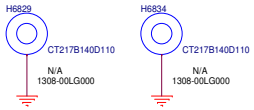

Main shielding 定位孔(Screw D,L)

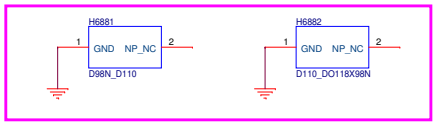

2017.3.9
R1.1---For ME

Screw support metal(Screw I)

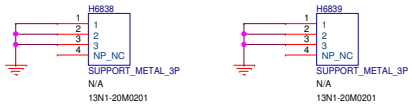

CPU Clip(BOT)

2017.3.14
R1.1---For ME

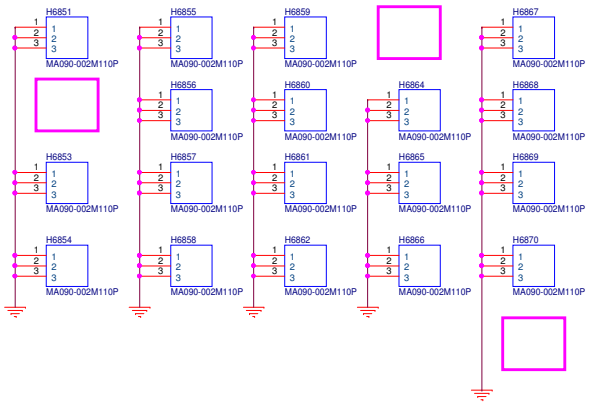

IO Clip(TOP)

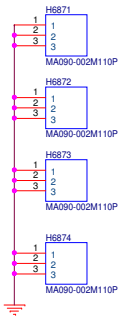

PEGATRON
PEGATRON PROPRIETARY AND CONFIDENTIAL

Title : ME Hole

BG1-HW3 RD

Engineer: Andy2_Kao

Size	Project Name	Rev
C	BE5EA	1.0

Date: Thursday, May 11, 2017 Sheet 68 of 94

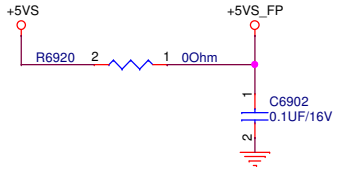

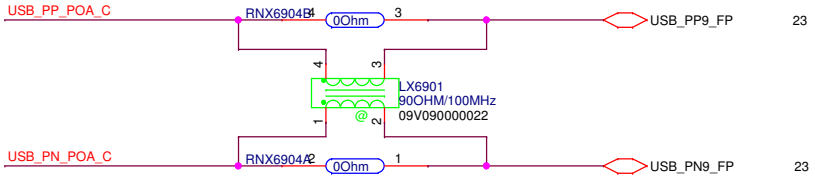

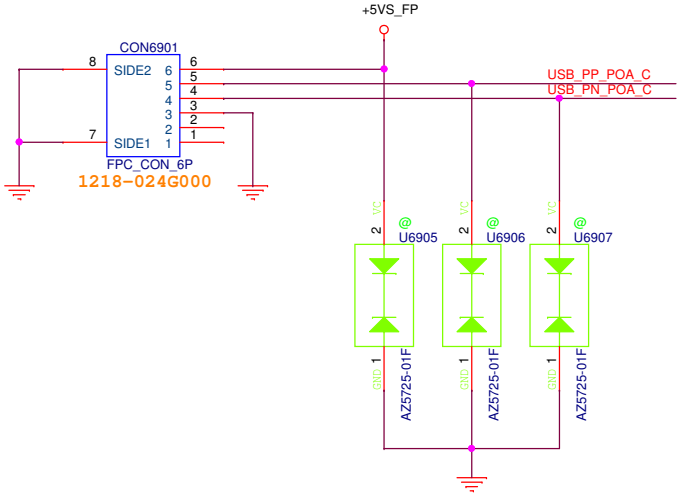

Pin	Definition
1	+PP_VCC
2	USBP
3	USBN
4	GND
5	NC
6	NC

PEGATRON
PEGATRON PROPRIETARY AND CONFIDENTIAL

Title : Finger printer

BG1-HW3 RD

Engineer: Andy2_Kao

Size	Project Name	Rev
B	BE5EA	1.0

Date: Thursday, May 11, 2017 Sheet 69 of 94

VGA_PCIE

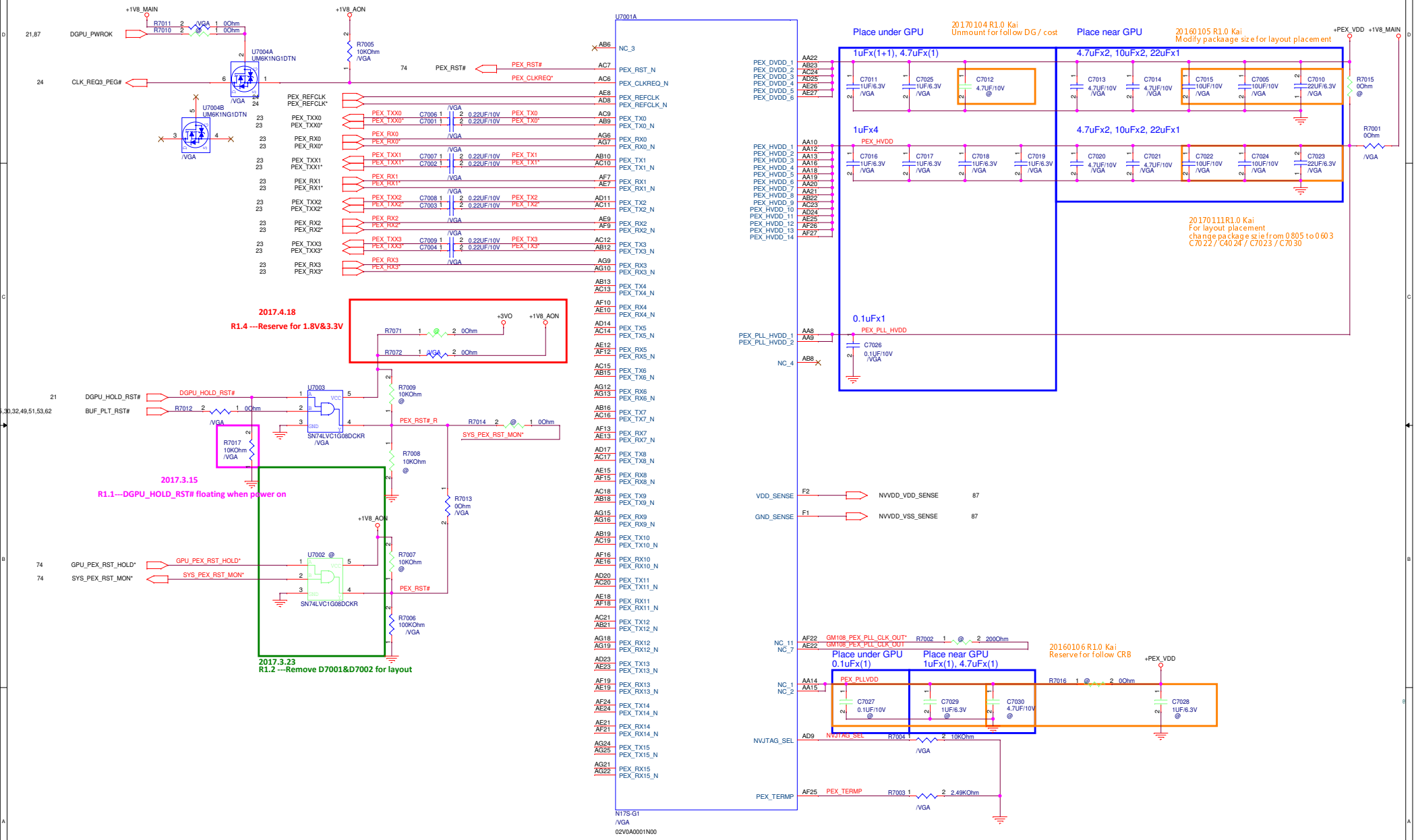

PEGATRON
PEGATRON PROPRIETARY AND CONFIDENTIAL
Title : VGA_PCIE
BG1-NB4
Engineer: Kai_Shen
Size C
Project Name HE4EA
Rev 1.0
Date: Thursday, May 11, 2017
Sheet 70 of 94

VGA_FRAME BUFFER_GDDR5

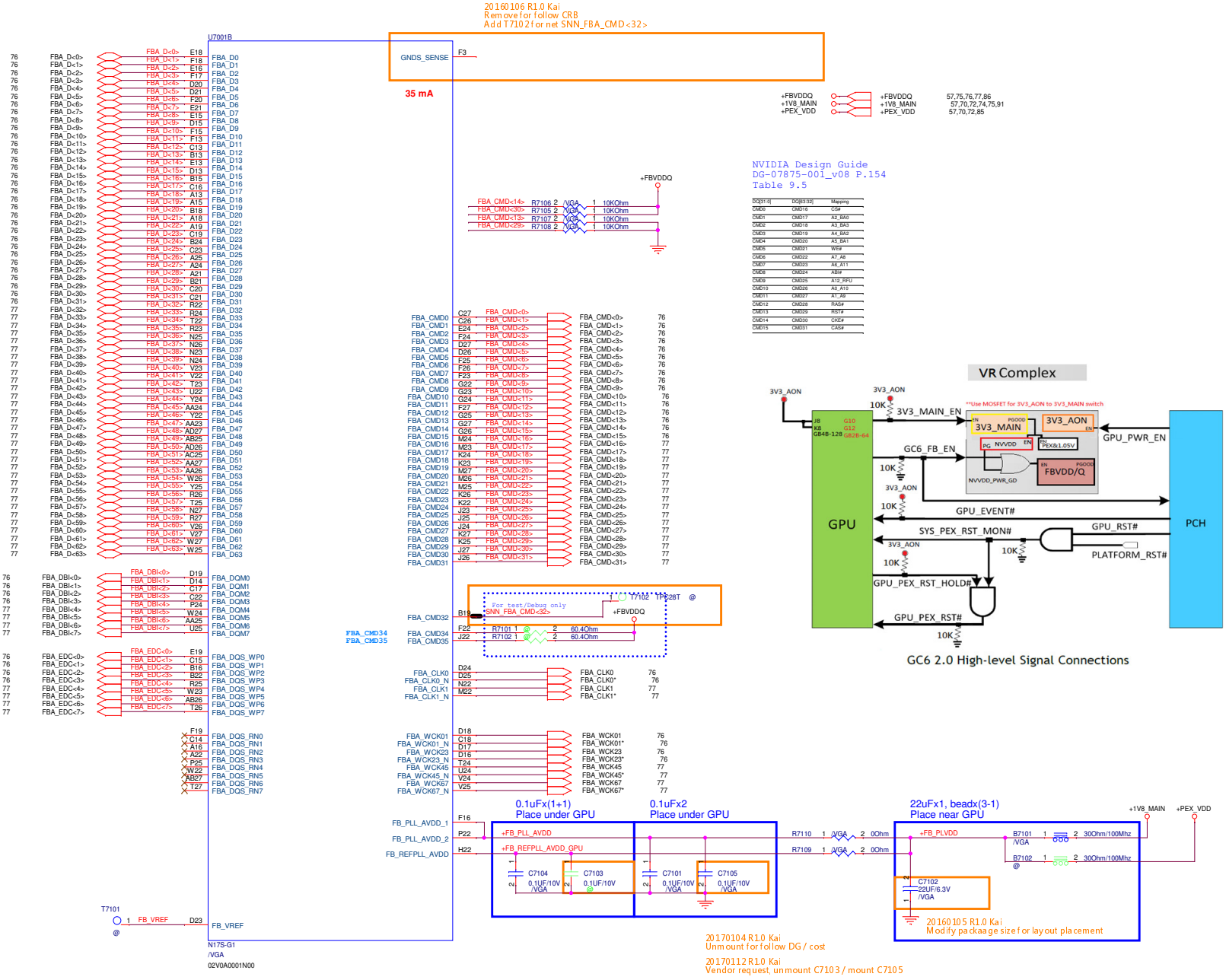

PEGATRON Title : VGA_FRAME BUFFER
PEGATRON PROPRIETARY AND CONFIDENTIAL
BG1-HW3 RD
Engineer: Andy2_Kao

Size	Project Name	Rev
C	BE5EA	1.0

Date: Thursday, May 11, 2017 Sheet 71 of 94

VGA_XTAL

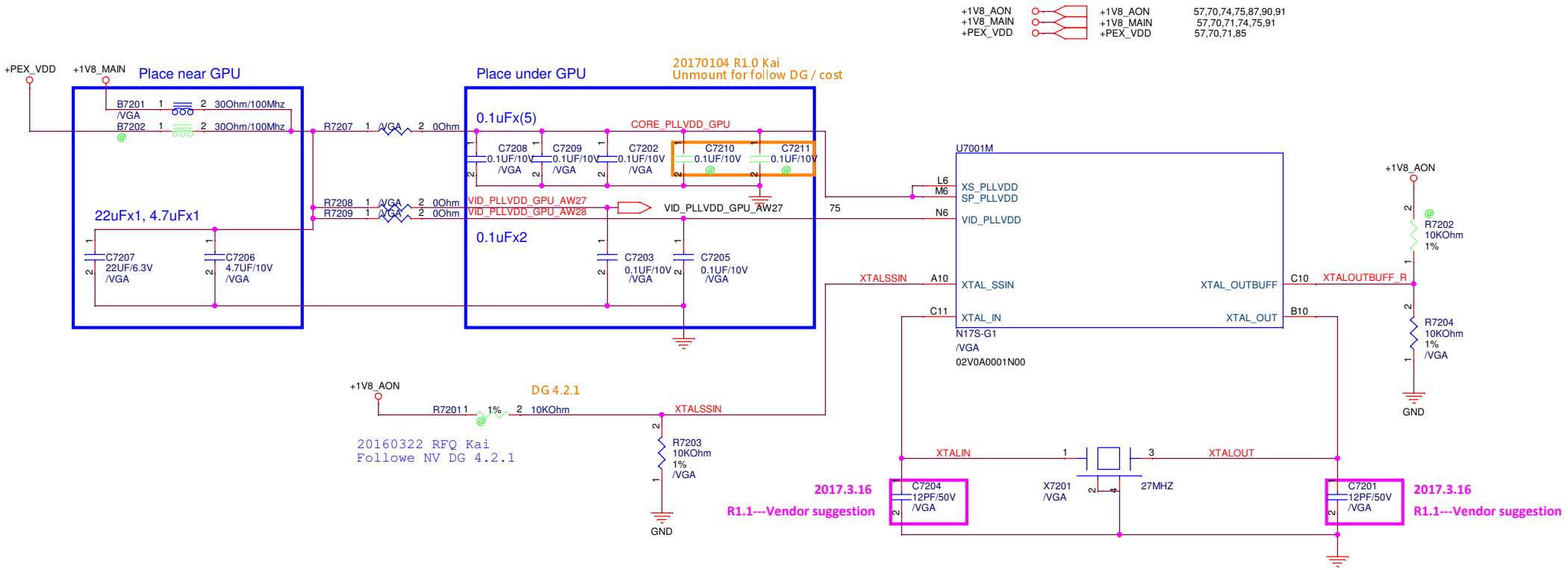

PEGATRON Title : VGA_XTAL

PEGATRON PROPRIETARY AND CONFIDENTIAL

BG1-HW3 RD Engineer: Andy2_Kao

Size	Project Name	Rev
B	BE5EA	1.0

Date: Thursday, May 11, 2017 Sheet 72 of 94

73 VGA_DISPLAY

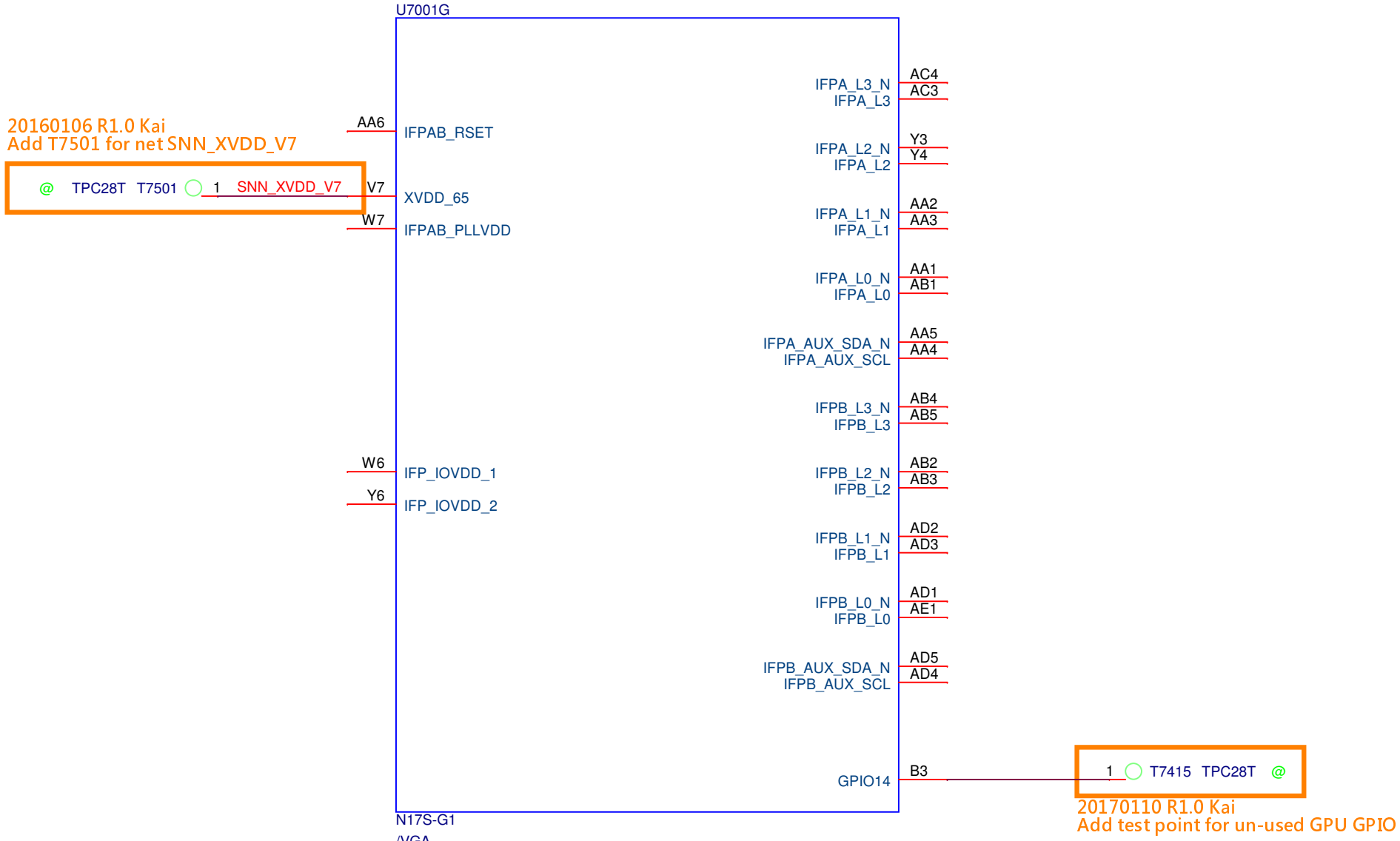

PEGATRON
PEGATRON PROPRIETARY AND CONFIDENTIAL

Title : VGA_DISPLAY

BG1-HW3 RD

Engineer: *Andy2_Kao*

Size	Project Name	Rev
A	BE5EA	1.0

Date: Thursday, May 11, 2017 Sheet 73 of 94

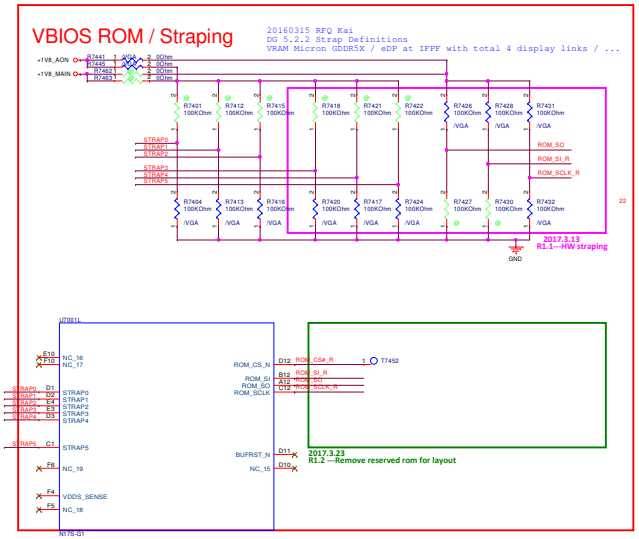

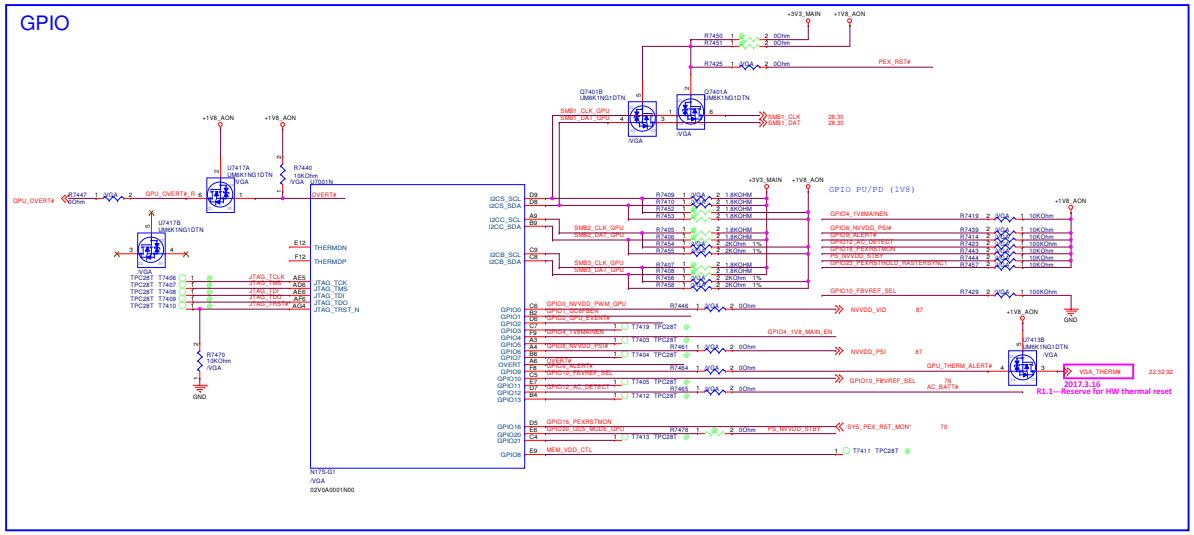

STRAP2	STRAP1	STRAP0	STRAP configure	Memory Density	Manufacturer Part Number	PEGA P/N
L (R7416)	L (R7413)	L (R7404)	0x0	8Gb	SAMSUNG/K4G80325FB-HC28	0315-01JG0PB
L (R7416)	L (R7413)	H (R7401)	0x1	8Gb	MICRON/MT51J256M32HF-70:A	0315-01LN0PB
L (R7416)	H (R7412)	L (R7404)	0x2	8Gb	SK HYNIX/H5GC8H24MJR-R0C	0315-01SB0PB
H (R7415)	H (R7412)	L (R7404)	0x6	4Gb	SK HYNIX/H5GC4H24AJR-R0C	0315-01HR0PB
H (R7415)	H (R7412)	H (R7401)	0x7	4Gb	MICRON/EDW4032BABG-70-F	0315-025D0PB
L (R7416)	L (R7413)	M (R7401 & R7404)	0x8	4Gb	SAMSUNG/K4G41325FE-HC28	0315-01Q90PB

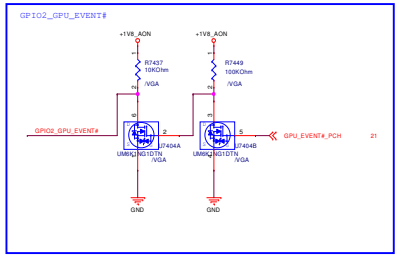

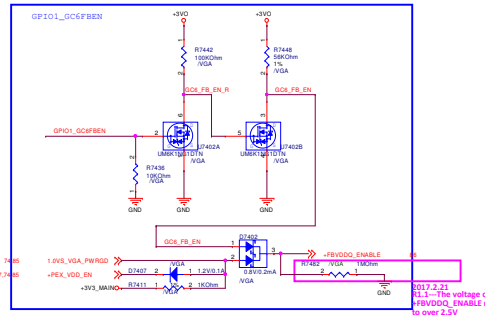

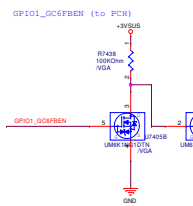

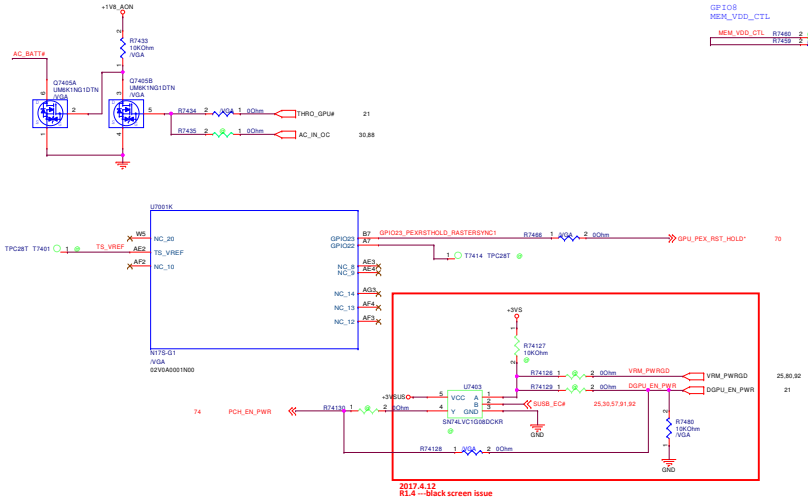

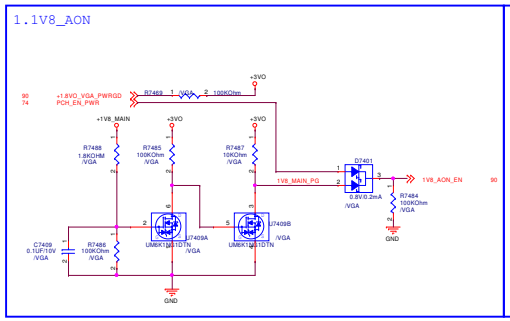

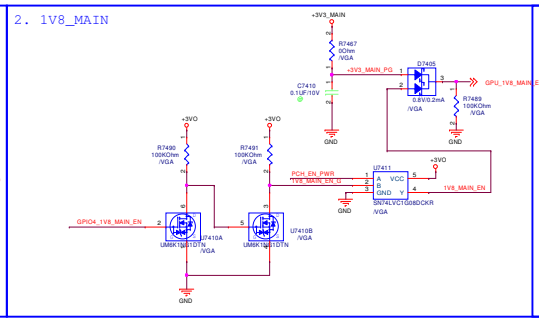

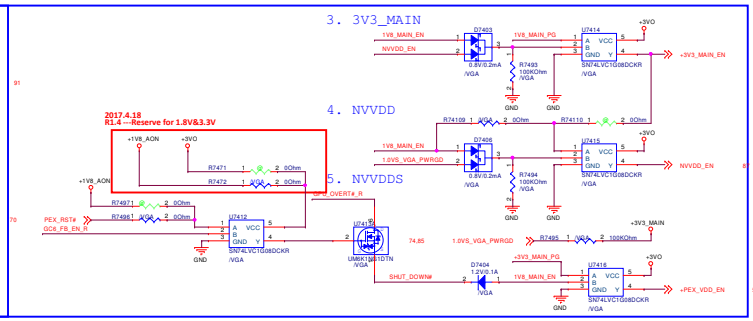

PEGATRON DT-MB RESTRICTED SECRET
<Variant Name>

PEGATRON Title : NVIDIA MSC/GPIO
Pegatron Corp. Engineer: Kai_Shen
Size: D | Project Name: HE4EA | Rev: 1.0
Date: Thursday, May 11, 2017 | Sheet 74 of 94

VGA_Power_GND

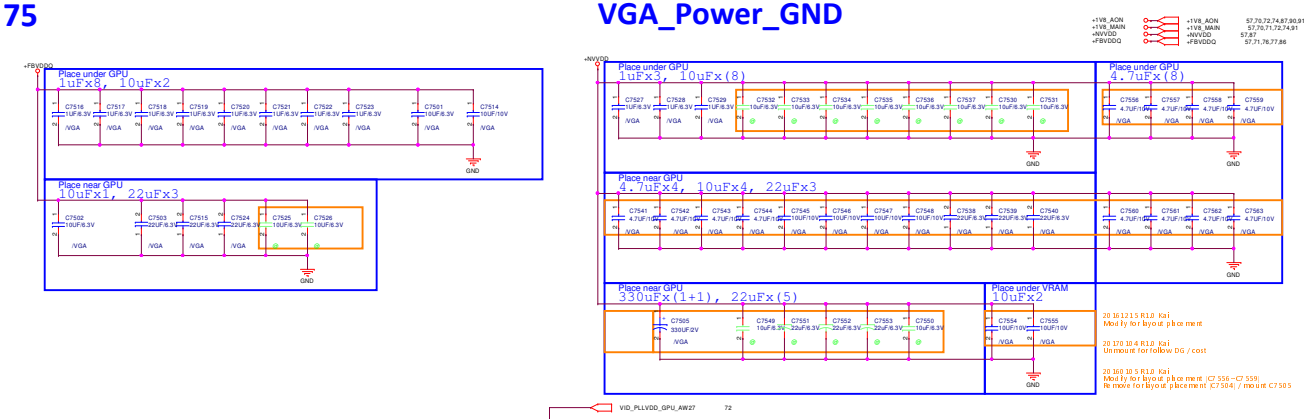

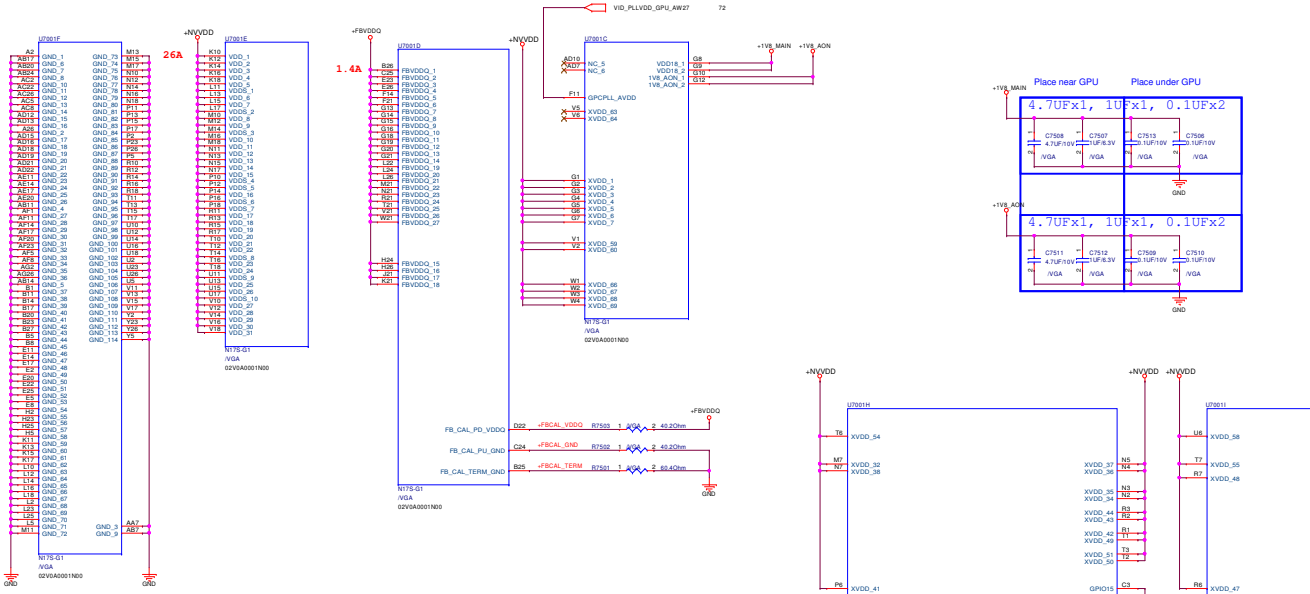

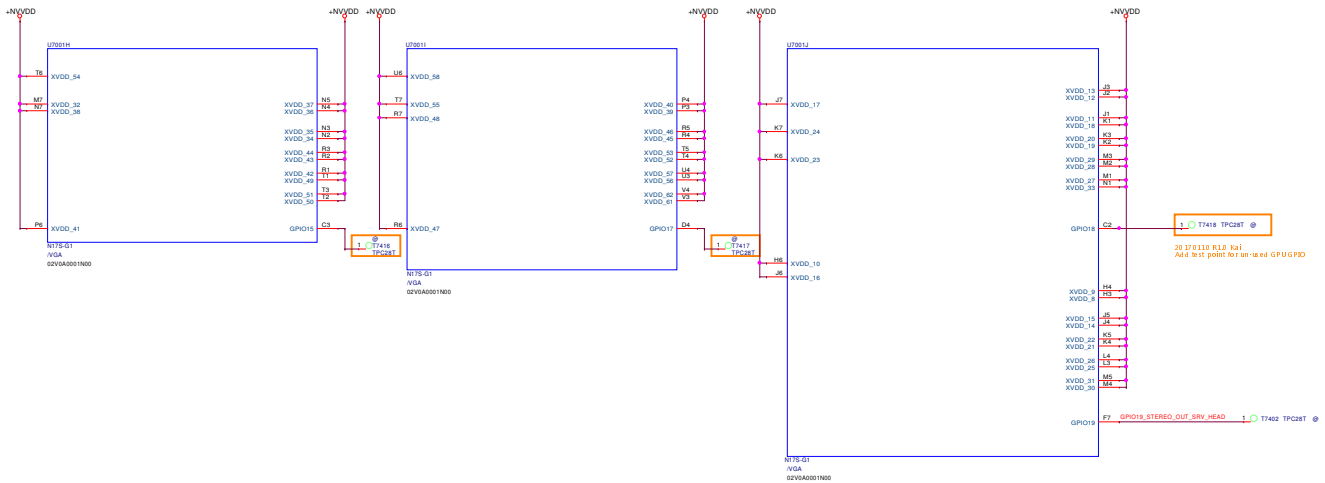

PEGATRON CORPORATION PROPRIETARY AND CONFIDENTIAL
G31-HW3 R0

Title : VGA_Power

Engineer: Andy2_Kao

Size	Project Name	Rev
D	BE5EA	1.0

Date: Thursday, May 11, 2017 Sheet 75 of 94

VGA_FBA_GDDR5_32-bit_01

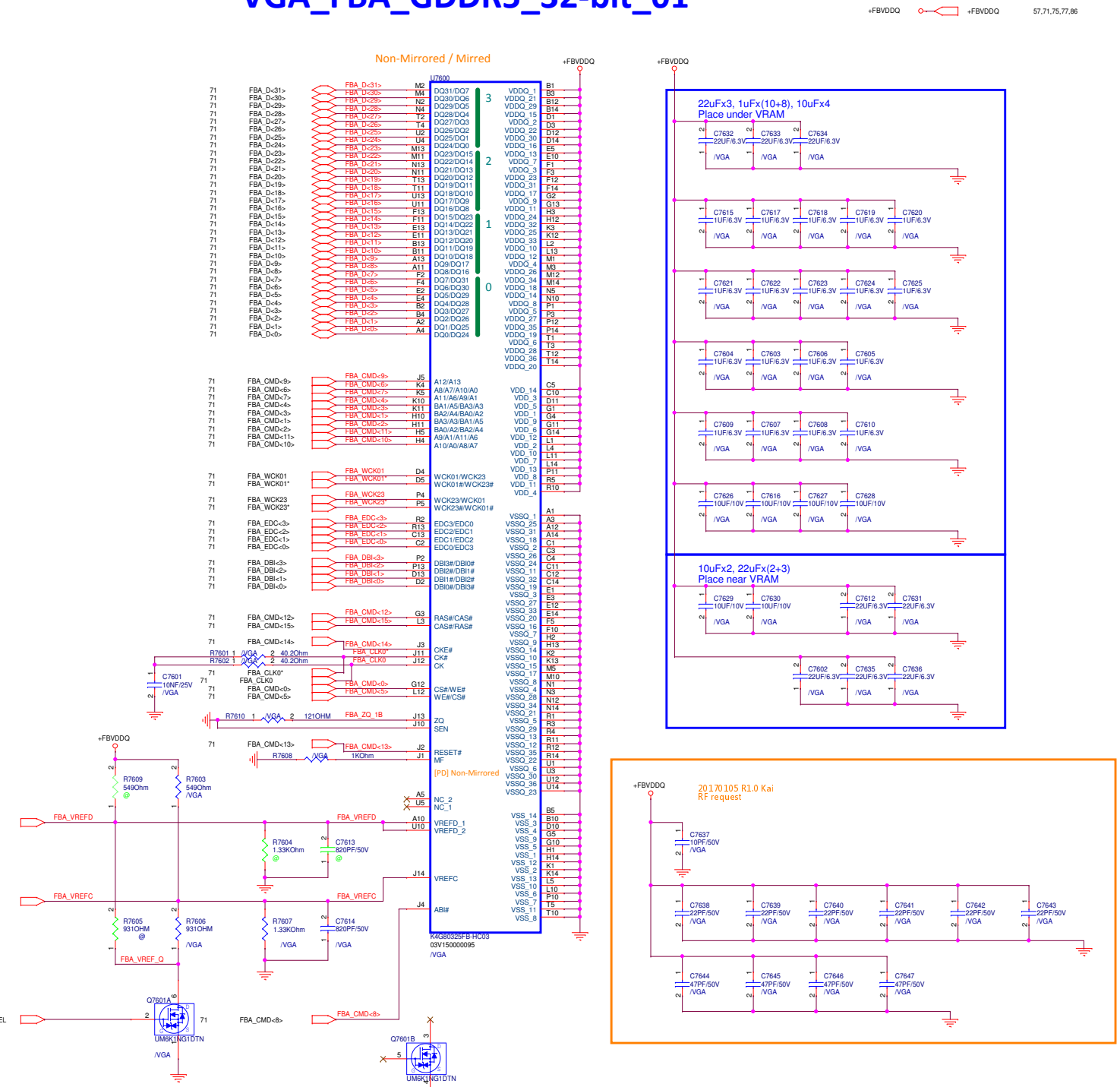

PEGATRON
PEGATRON PROPRIETARY AND CONFIDENTIAL

Title : VGA_FBA_GDDR5

BG1-HW3 RD

Engineer: Andy2_Kao

Size	Project Name	Rev
C	BE5EA	1.0

Date: Thursday, May 11, 2017 Sheet 76 of 94

VGA_FBA_GDDR5_32-bit_02

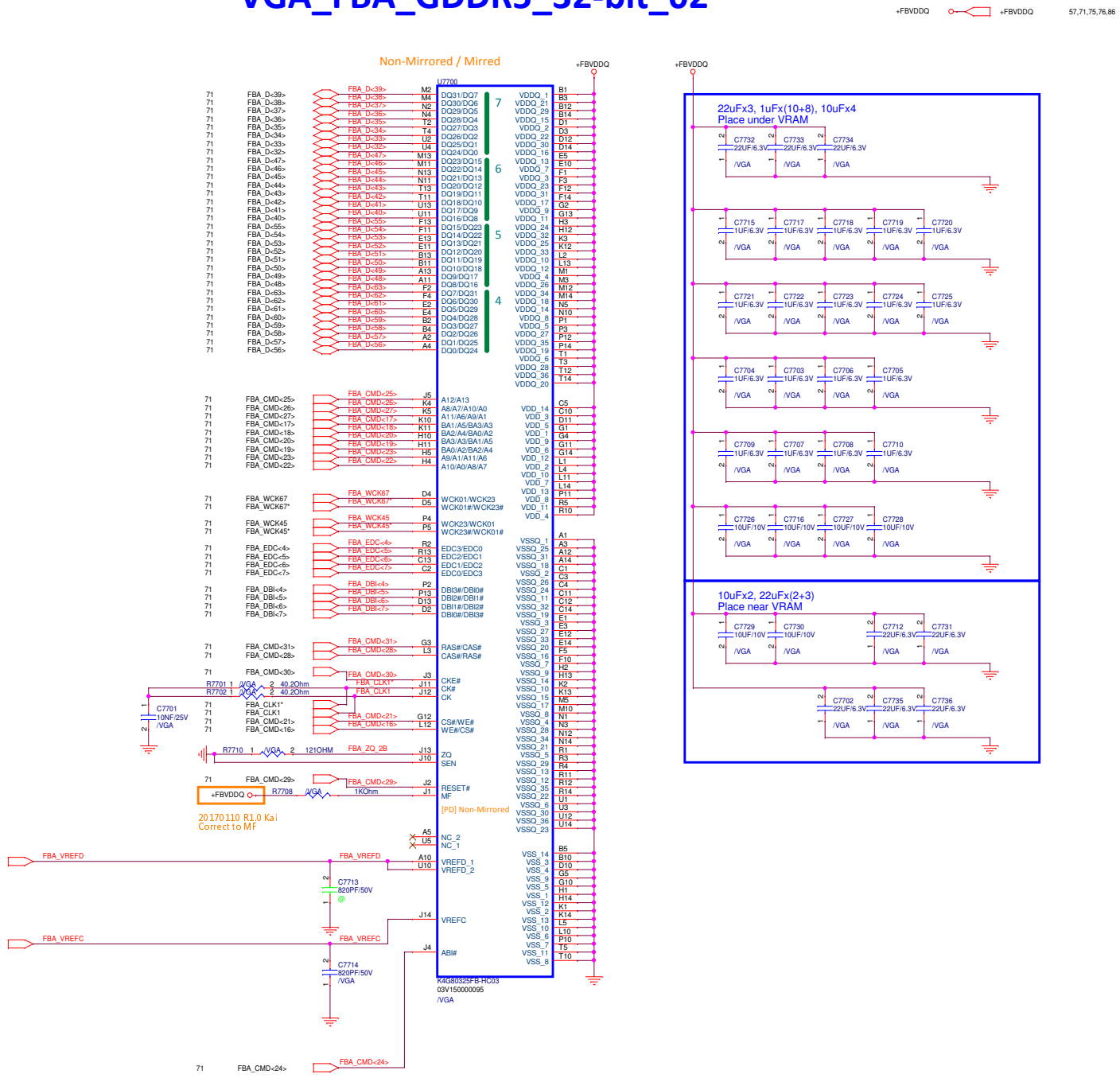

PEGATRON	Title : VGA_FBA_GDDR5
PEGATRON PROPRIETARY AND CONFIDENTIAL	
BG1-HW3 RD	Engineer: Andy2_Kao
Size C	Project Name BE5EA
Rev 1.0	
Date: Thursday, May 11, 2017	Sheet 77 of 94

78 N/A

PEGATRON	Title : N/A		
BG1-HW3 RD	Engineer: *Andy2_Kao*		
Size A	Project Name BE5EA		Rev 1.0
Date: Thursday, May 11, 2017		Sheet 78 of 94	

79 N/A

PEGATRON	Title : N/A		
BG1-HW3 RD	Engineer: *Andy2_Kao*		
Size A	Project Name BE5EA		Rev 1.0
Date: Thursday, May 11, 2017		Sheet 79 of 94	

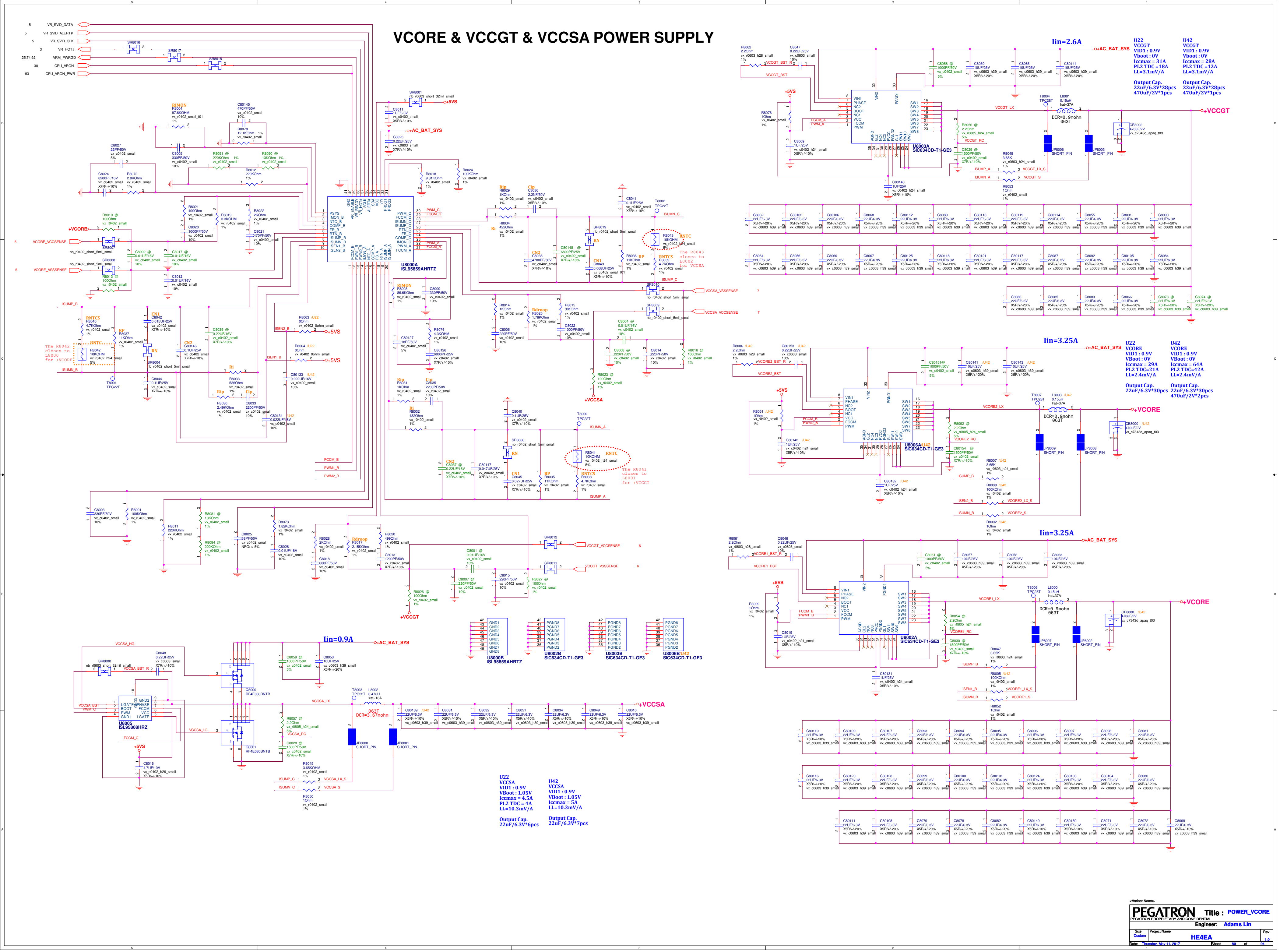
VCORE & VCCGT & VCCSA POWER SUPPLY
Iin=2.6A
U22
VCCGT
VID1 : 0.9V
Vboot : 0V
Iccmax = 31A
PL2 TDC =18A
LL=3.1mV/A
Output Cap.
22uF/6.3V*28pcs
470uF/2V*1pcs
U42
VCCGT
VID1 : 0.9V
Vboot : 0V
Iccmax = 28A
PL2 TDC =12A
LL=3.1mV/A
Output Cap.
22uF/6.3V*28pcs
470uF/2V*1pcs
Iin=3.25A
U22
VCORE
VID1 : 0.9V
VBoot : 0V
Iccmax = 29A
PL2 TDC=21A
LL=2.4mV/A
Output Cap.
22uF/6.3V*30pcs
U42
VCORE
VID1 : 0.9V
VBoot : 0V
Iccmax = 64A
PL2 TDC=42A
LL=2.4mV/A
Output Cap.
22uF/6.3V*30pcs
470uF/2V*2pcs
Iin=3.25A
Iin=0.9A
U22
VCCSA
VID1 : 0.9V
VBoot : 1.05V
Iccmax = 4.5A
PL2 TDC = 4A
LL=10.3mV/A
Output Cap.
22uF/6.3V*6pcs
U42
VCCSA
VID1 : 0.9V
VBoot : 1.05V
Iccmax = 5A
LL=10.3mV/A
Output Cap.
22uF/6.3V*7pcs
+VCCGT
+VCORE
+VCCSA
+AC_BAT_SYS
U8000A
ISL95859AHRTZ
U8003A
SIC634CD-T1-GE3
U8006A
SIC634CD-T1-GE3
U8002A
SIC634CD-T1-GE3
U8005
ISL95808HRZ
PEGATRON
PEGATRON PROPRIETARY AND CONFIDENTIAL
Title : POWER_VCORE
Engineer: Adams Lin
HE4EA
Thursday, May 11, 2017
80 of 94
Rev 1.0

5VO & 3VO POWER SUPPLY

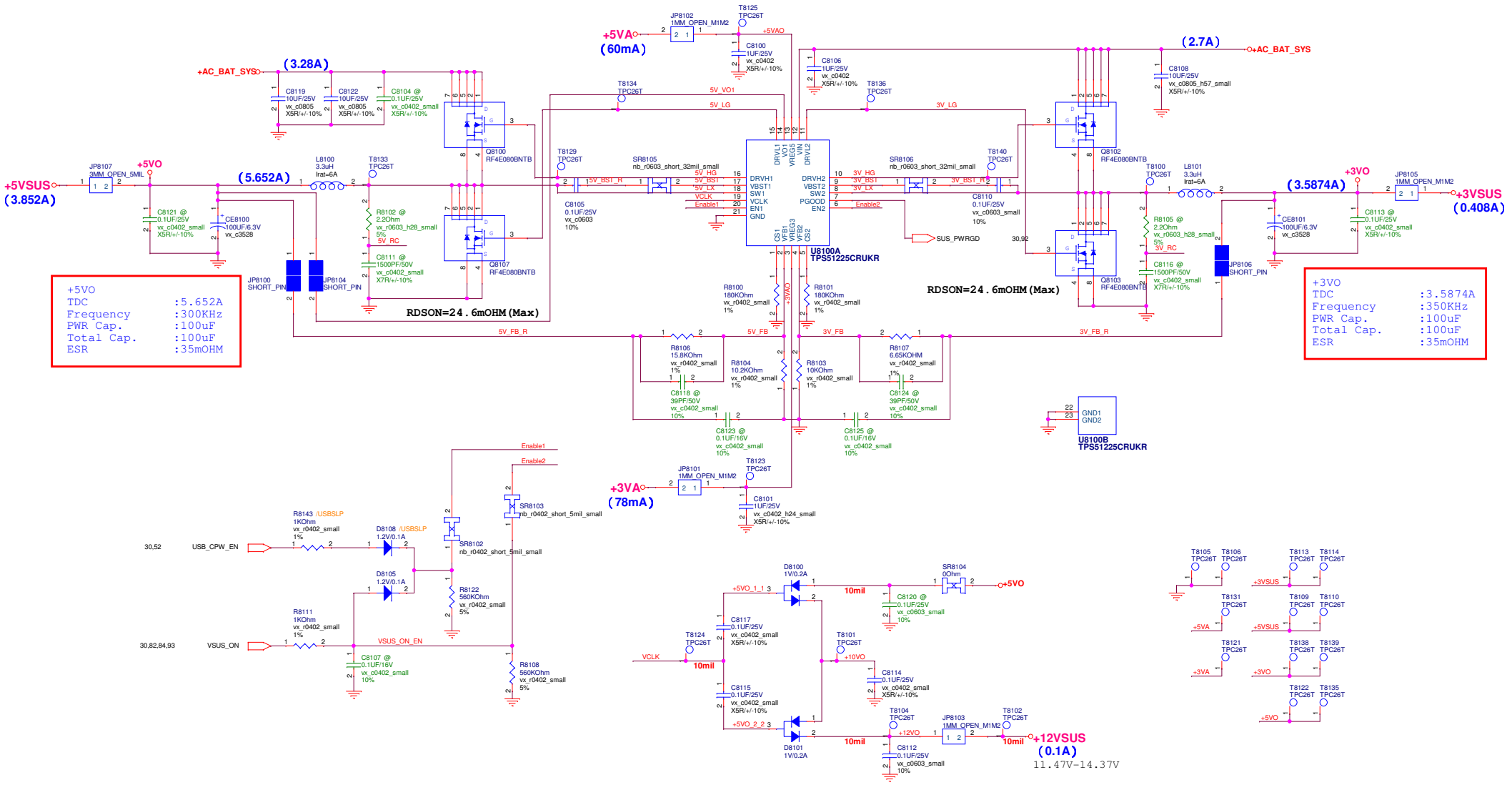

<Variant Name>

PEGATRON Title : POWER_SYSTEM

PEGATRON PROPRIETARY AND CONFIDENTIAL

Engineer: Simon Liao

Size	Project Name	Rev
Custom	BE5EA	1.1

Date: Thursday, May 11, 2017 Sheet 81 of 94

+1.0VSUS POWER SUPPLY

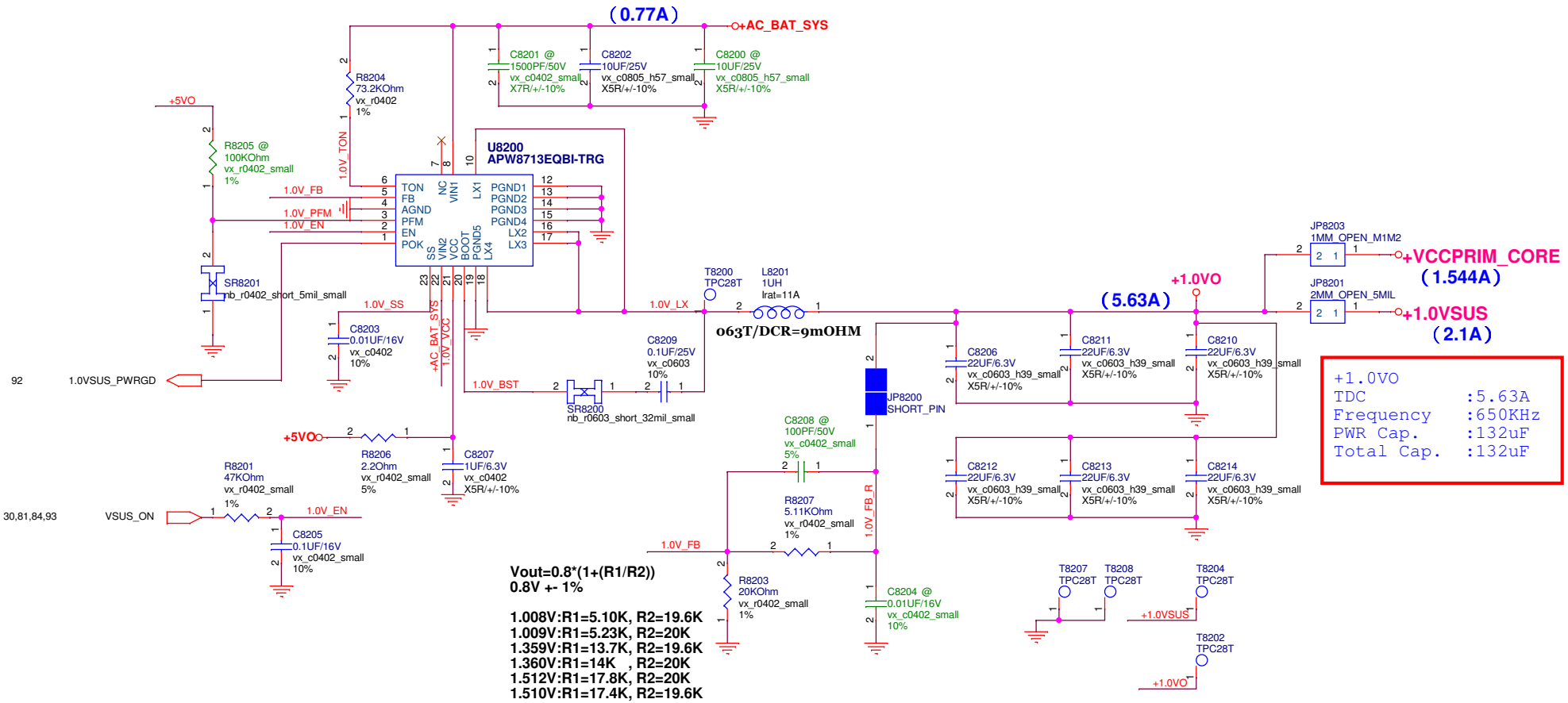

<Variant Name>

PEGATRON
PEGATRON PROPRIETARY AND CONFIDENTIAL

Title : P82_+1.0VSUS & +2.5V

Engineer: Simon Liao

Size	Project Name	Rev
Custom	BE5EA	1.1

Date: Thursday, May 11, 2017 Sheet 82 of 94

DDR & VTT POWER SUPPLY

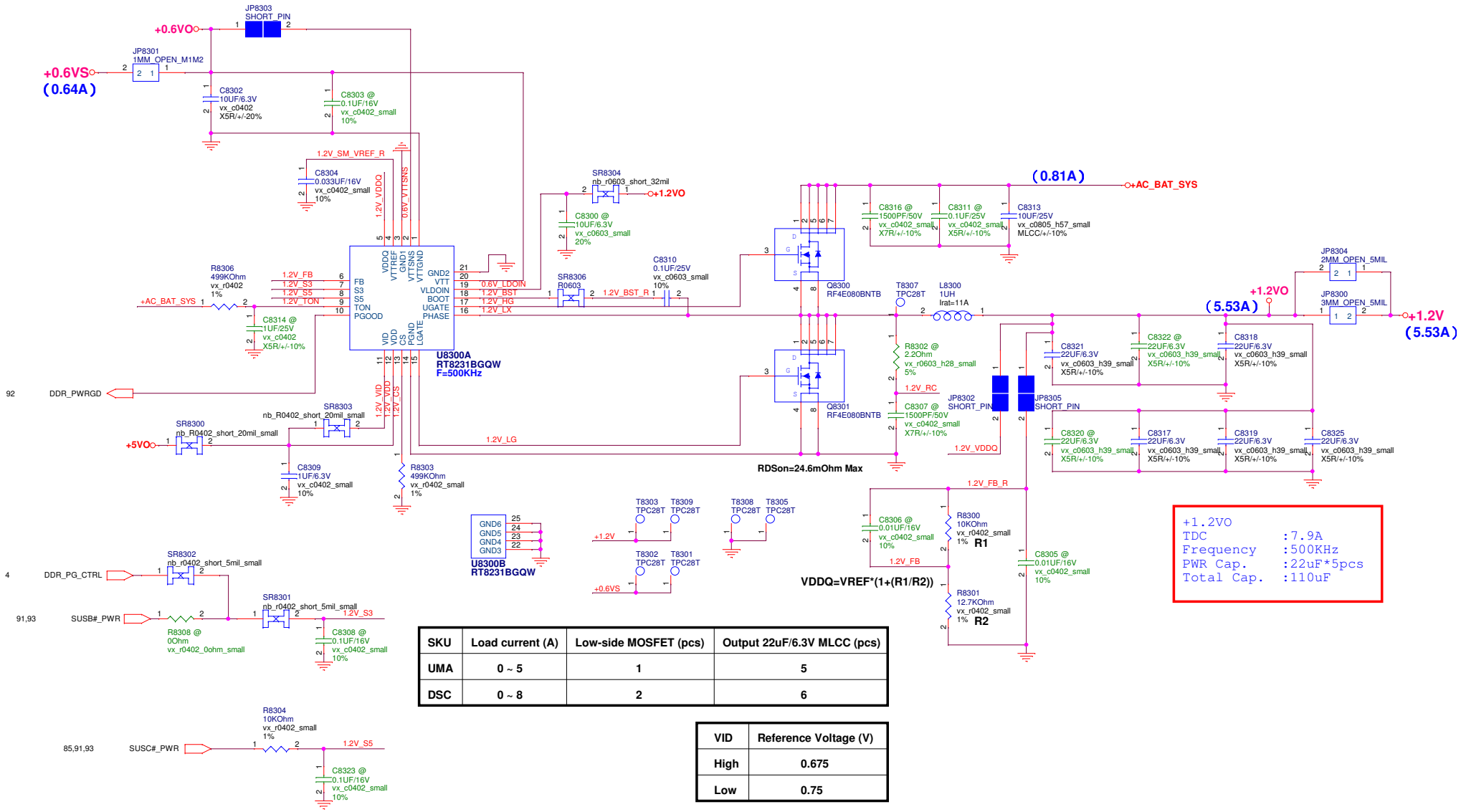

SKU	Load current (A)	Low-side MOSFET (pcs)	Output 22uF/6.3V MLCC (pcs)
UMA	0 ~ 5	1	5
DSC	0 ~ 8	2	6

VID	Reference Voltage (V)
High	0.675
Low	0.75

PEGATRON
PEGATRON PROPRIETARY AND CONFIDENTIAL

Title : POWER_DDR & VTT

Engineer: Simon Liao

Size	Project Name	Rev
Custom	BE5EA	1.1

Date: Thursday, May 11, 2017 Sheet 83 of 94

1.8VSUS POWER SUPPLY

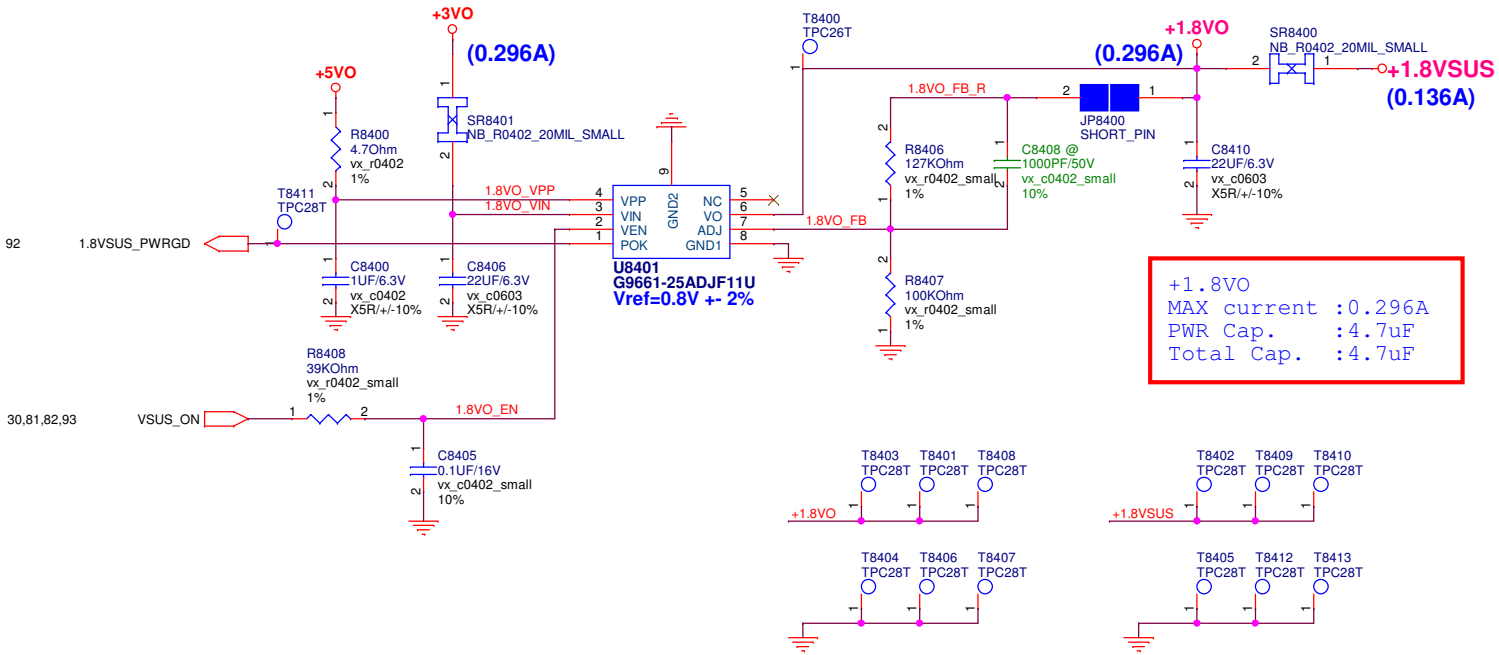

<Variant Name>

PEGATRON
PEGATRON PROPRIETARY AND CONFIDENTIAL

Title : POWER_1.8VSUS

Engineer: Simon Liao

Size	Project Name	Rev
B	BE5EA	1.0

Date: Thursday, May 11, 2017 Sheet 84 of 94

PEX_VDD POWER SUPPLY

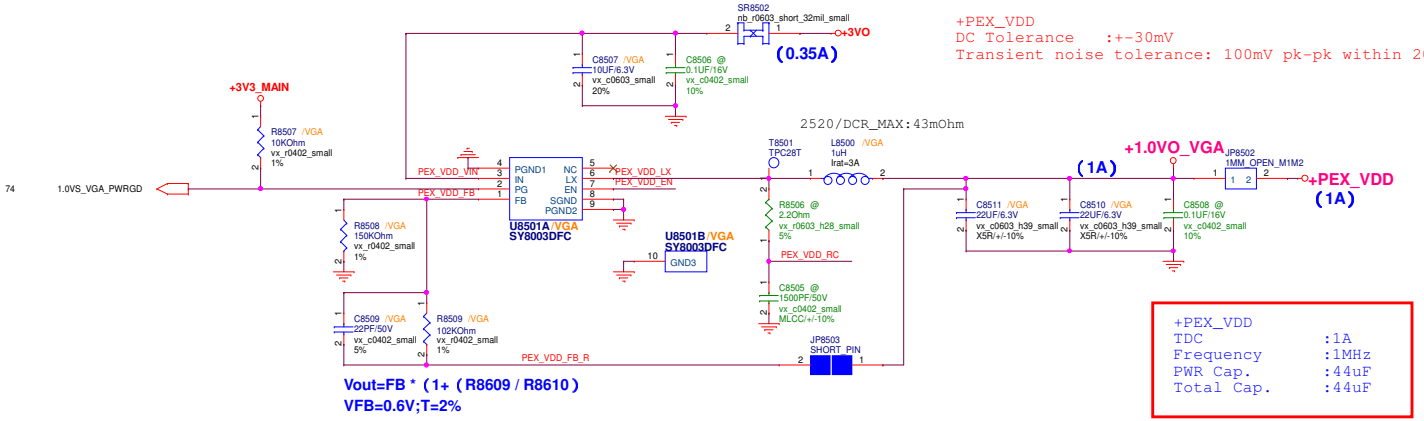

+PEX_VDD
DC Tolerance :+-30mV
Transient noise tolerance: 100mV pk-pk within 20MHz BW

+PEX_VDD	
TDC	:1A
Frequency	:1MHz
PWR Cap.	:44uF
Total Cap.	:44uF

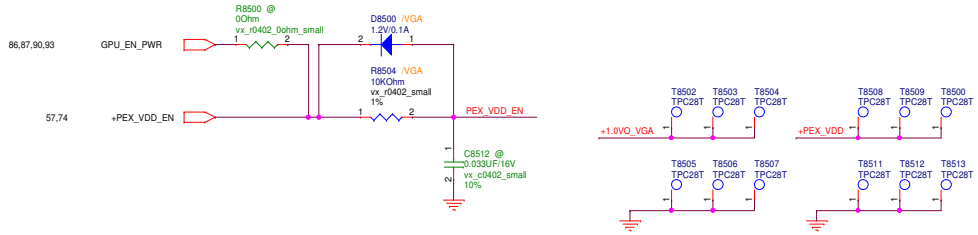

2.5V POWER SUPPLY

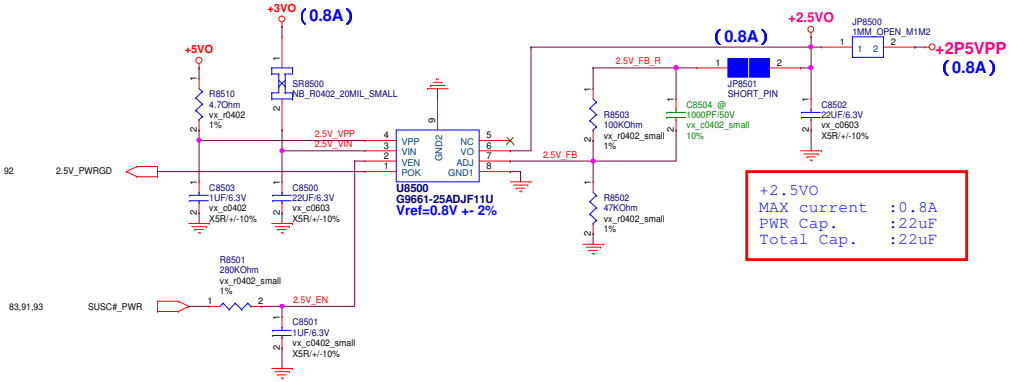

+2.5VO	
MAX current	:0.8A
PWR Cap.	:22uF
Total Cap.	:22uF

<Variant Name>

PEGATRON
PEGATRON PROPRIETARY AND CONFIDENTIAL

Title : POWER_PEX_VDD +2P5VPP

Engineer: Simon Liao

Size	Project Name	Rev
C	BE5EA	1.1

Date: Thursday, May 11, 2017 Sheet 85 of 94

FBVDDQ POWER SUPPLY

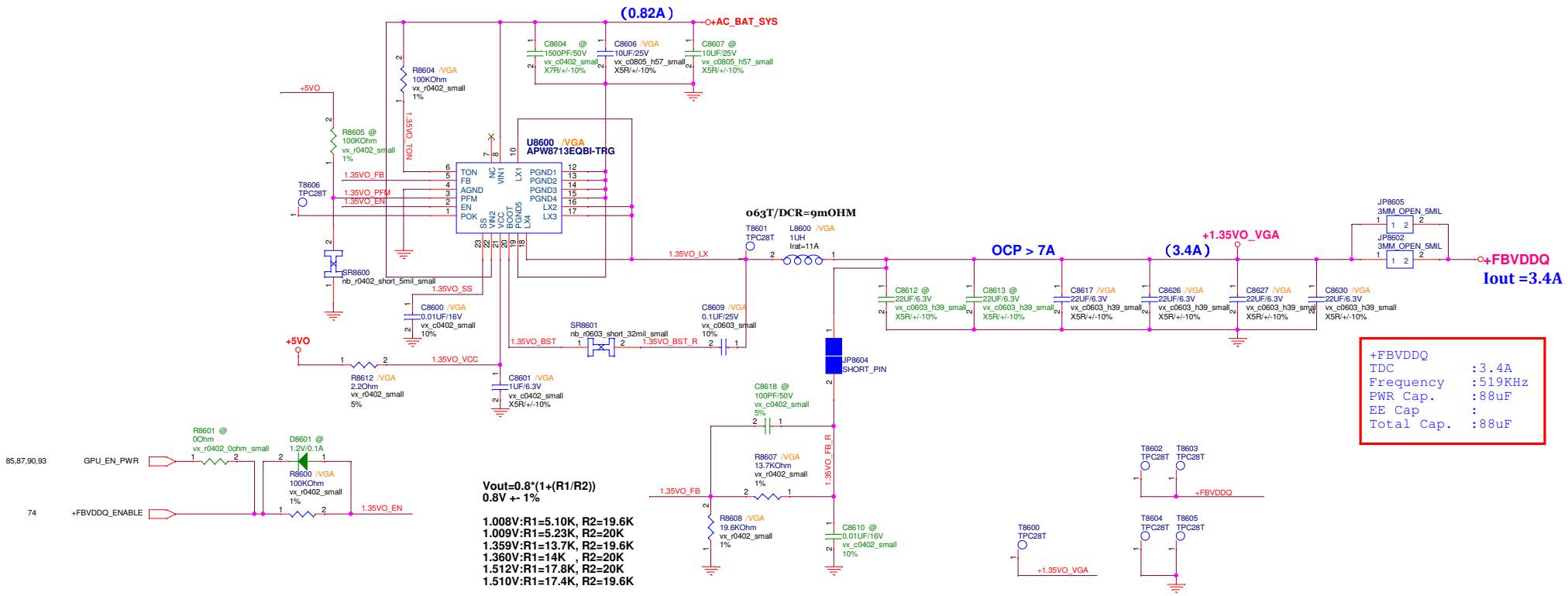

<Variant Name>

PEGATRON
PEGATRON PROPRIETARY AND CONFIDENTIAL

Title : POWER_FBVDDQ

Engineer: Simon Liao

Size	Project Name	Rev
Custom	BE5EA	1.1

Date: Thursday, May 11, 2017 Sheet 86 of 94

VGA_CORE POWER SUPPLY

	N17S_G1
R8723	6.19K
R8721	20.5K
R8716	4.32K
R8715	16.5K
R8717	309
C8720	4.7nF
Vstep	6.25mV
Vmin	0.3V
Vmax	1.3V
Vboot	0.8V

VGA_PSI#	VO_action
~ 0.4V	1 Phase DEM
0.7 ~ 0.88V	1 Phase FCCM
1.08 ~ 1.35V	2 Phase FCCM
1.6V ~	2 Phase FCCM

+VGA_VCORE(Package type:N17VS-G1)
DC Tolerance :+-20mV

Overshoot/undershoot
Transient noise tolerance: -10% ~ +20% within 20MHz BW
High frequency noise: 400mV pk-pk within 1GHz BW

VID:0.6V ~ 1.2V
Number of programmable Volt: 96 levels
Programmable volt steps: 6.25mV
Settling Time: < 100us for rising, no restriction on falling

2 PHASE 25W
N17S-G1
TDC=29.7A
OCP:62A

+NVVDD (2 Phase)

TDC	:29.7A
Frequency	:305KHz
PWR Cap.	:940uF
EE Cap.	:139.5uF
Total Cap.	:1079.5uF
ESR	:3mOHM

BATTERY CHARGER

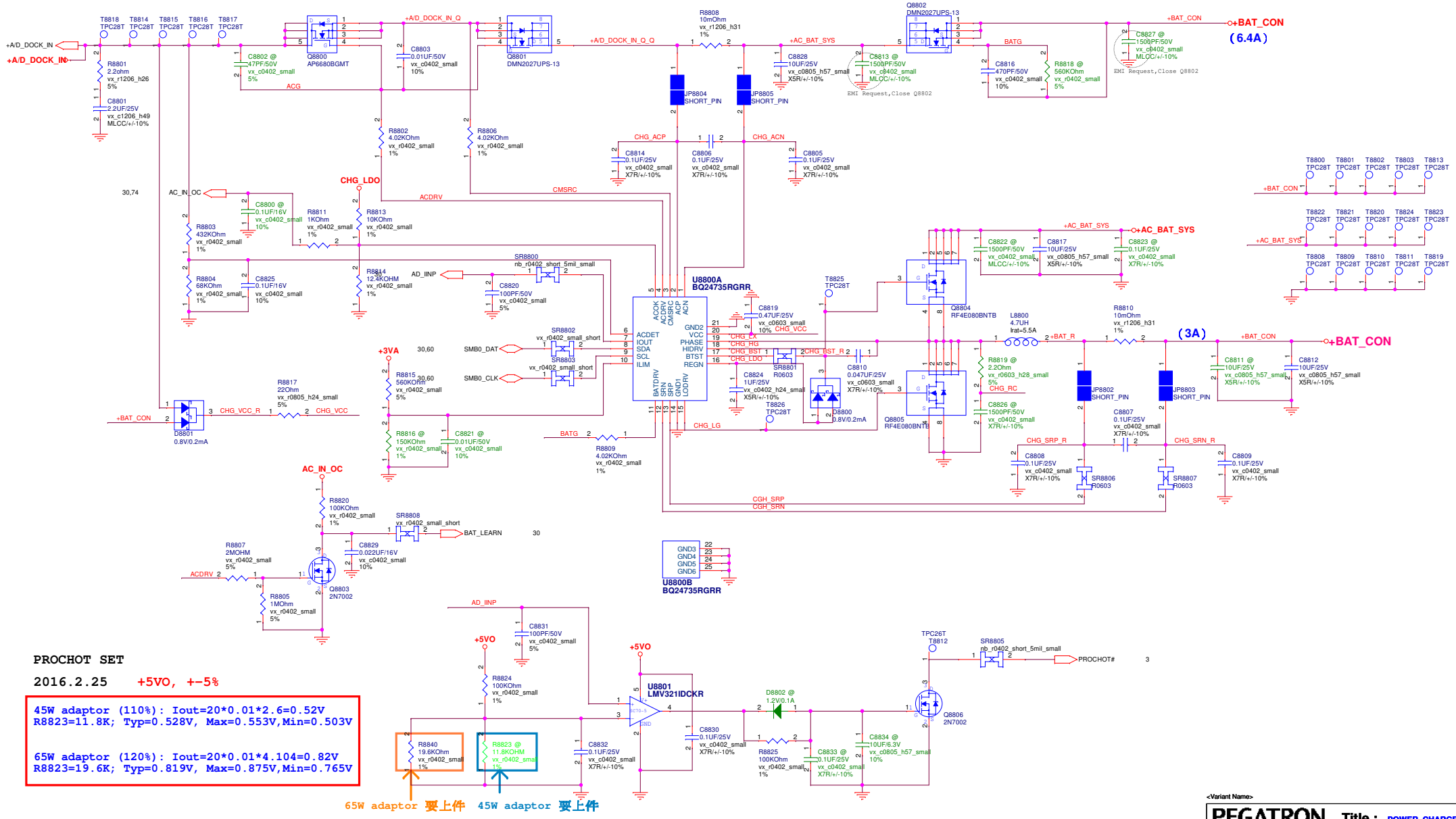

PROCHOT SET

2016.2.25 +5VO, +-5%

45W adaptor (110%): Iout=20*0.01*2.6=0.52V
R8823=11.8K; Typ=0.528V, Max=0.553V,Min=0.503V

65W adaptor (120%): Iout=20*0.01*4.104=0.82V
R8823=19.6K; Typ=0.819V, Max=0.875V,Min=0.765V

<Variant Name>

PEGATRON

PEGATRON PROPRIETARY AND CONFIDENTIAL

Title :

Engineer: Simon Liao

Size	Project Name	Rev
A	BE5EA	1.1

Date: Thursday, May 11, 2017

Sheet 89 of 94

1V8_AON POWER SUPPLY

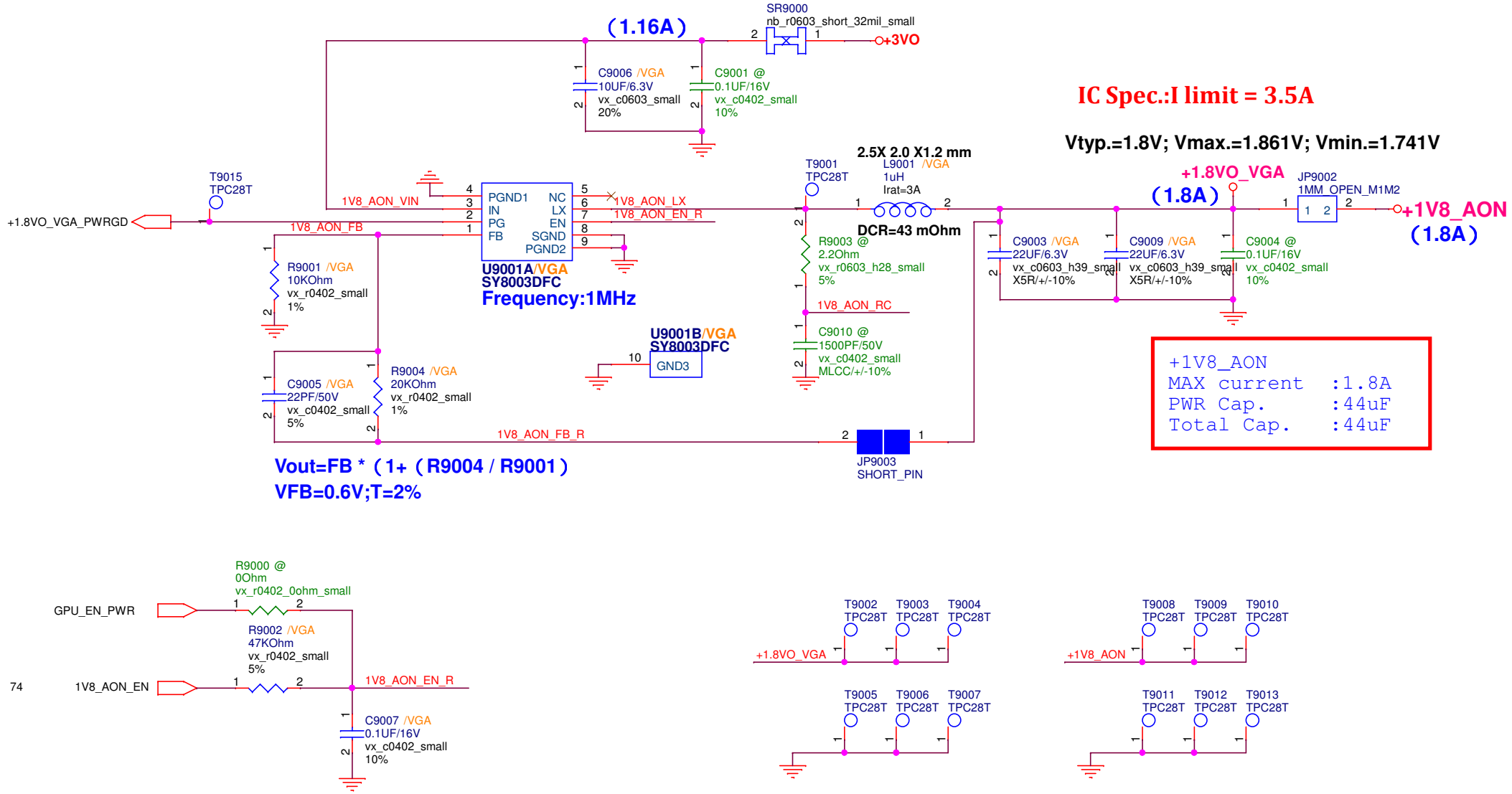

<Variant Name>

PEGATRON

PEGATRON PROPRIETARY AND CONFIDENTIAL

Title : +1V8_AON

Engineer: Simon Liao

Size	Project Name	Rev
Custom	BE5EA	1.1

Date: Thursday, May 11, 2017 Sheet 90 of 94

SUSB#_PWR POWER
SUSC#_PWR POWER

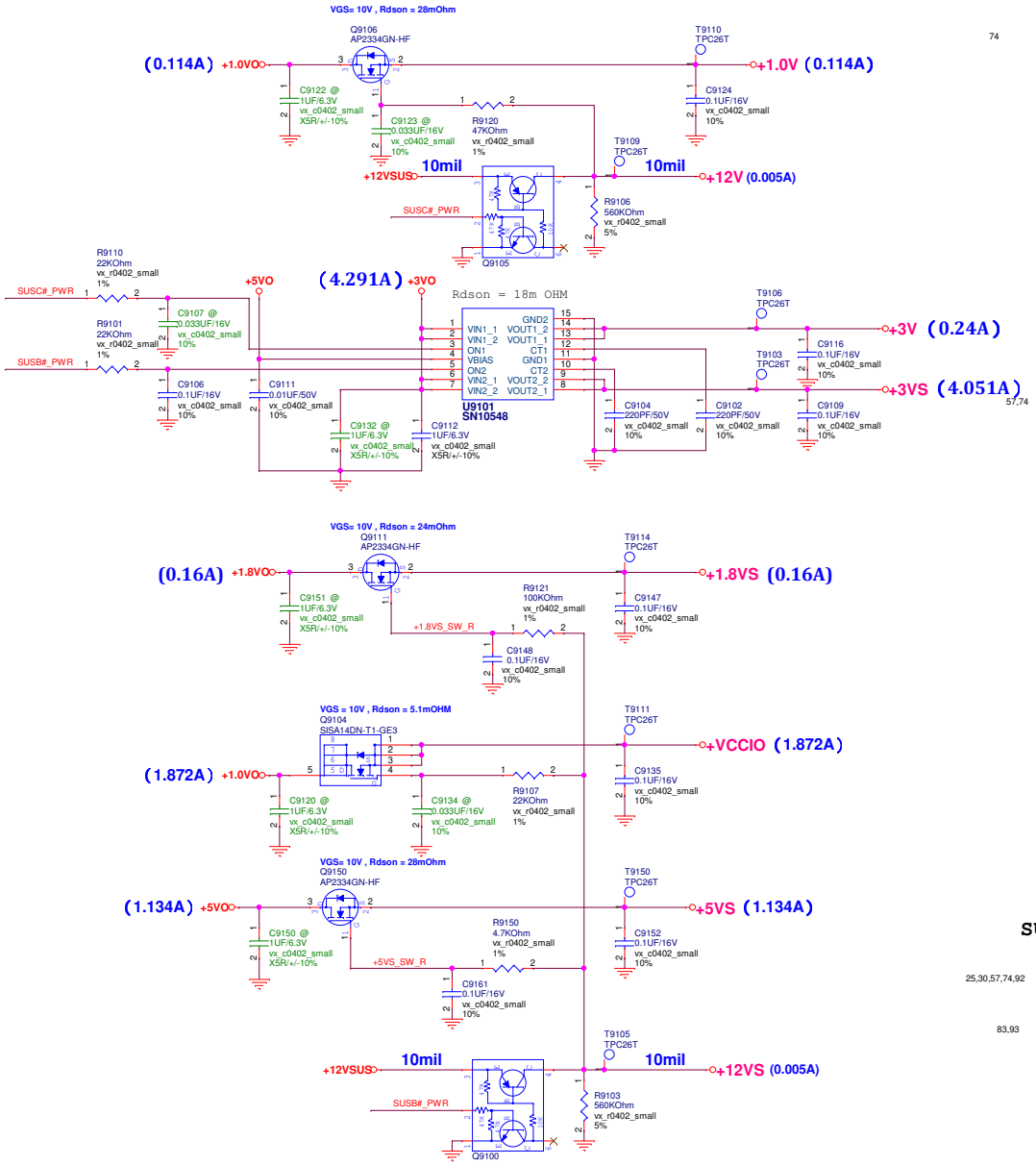

DSC_VGA_PWR POWER

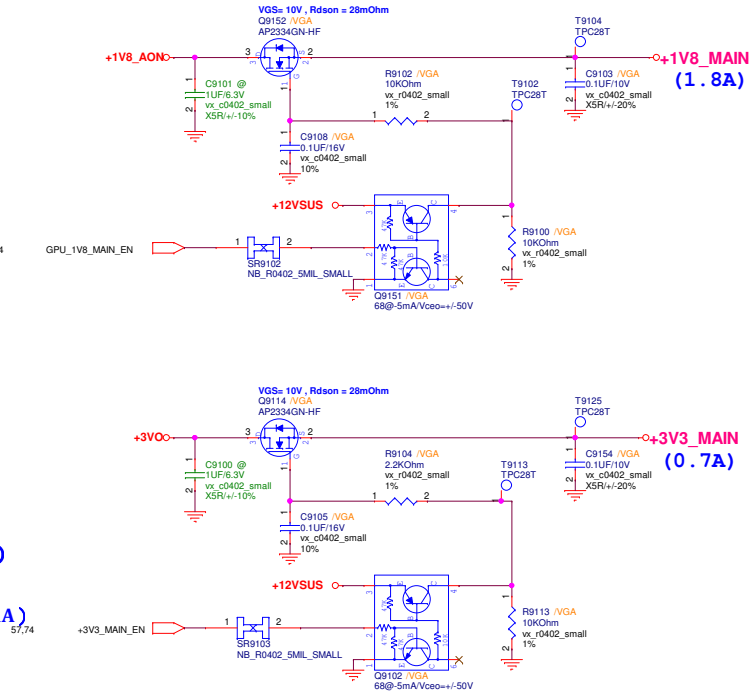

SUSB#_PWR POWER Control

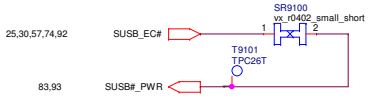

SUSC#_PWR POWER Control

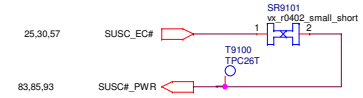

<Variant Name>

PEGATRON
PEGATRON PROPRIETARY AND CONFIDENTIAL

Title : POWER_LOAD SWITCH

Engineer: Simon Liao

Size	Project Name	Rev
Custom	BE5EA	1.1

Date: Thursday, May 11, 2017 Sheet 91 of 94

POWER GOOD DETECTER

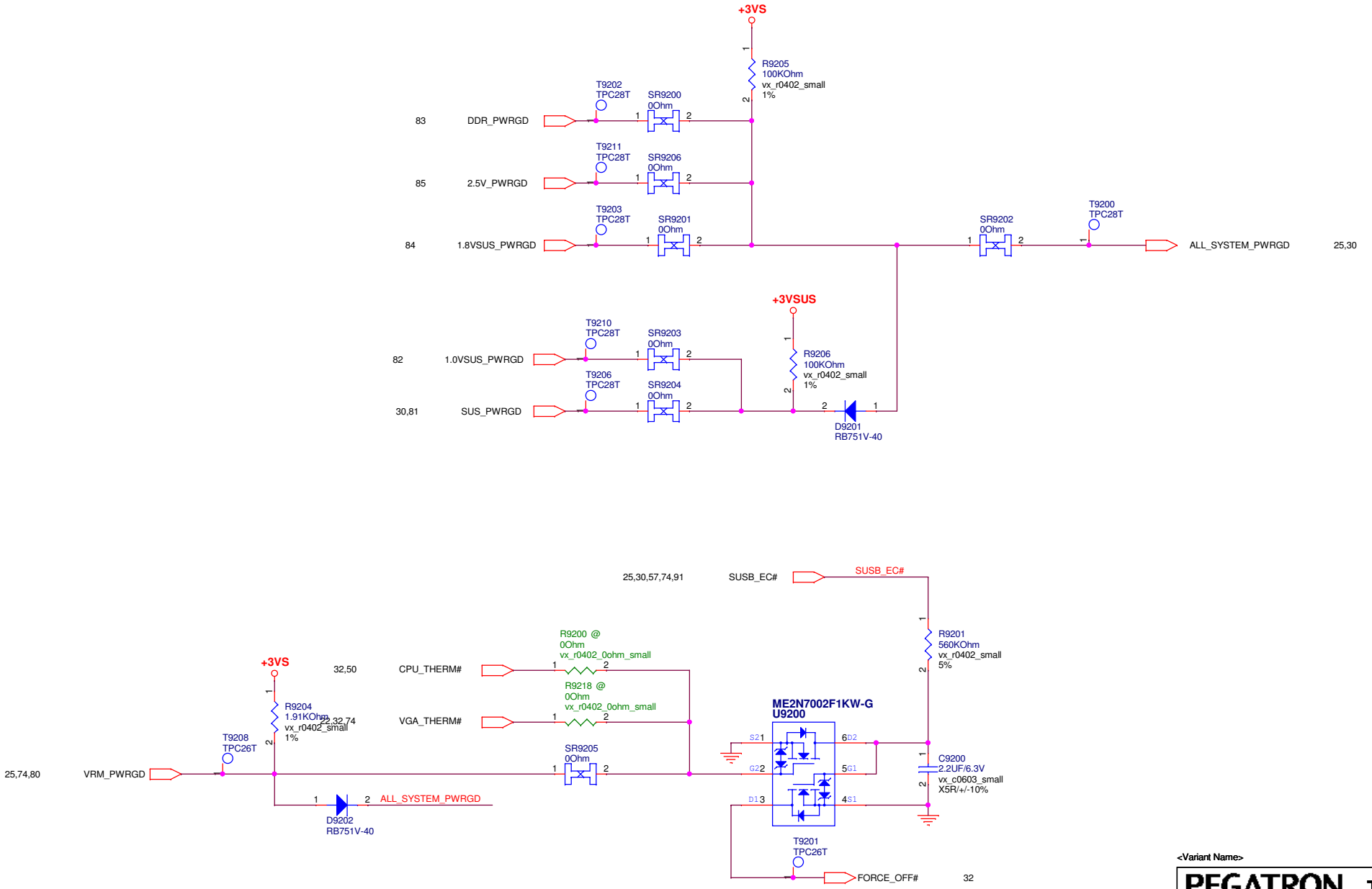

<Variant Name>

PEGATRON
PEGATRON PROPRIETARY AND CONFIDENTIAL

Title : POWER_PROTECT

Engineer: Simon Liao

Size	Project Name	Rev
Custom	BE5EA	1.1

Date: Thursday, May 11, 2017 Sheet 92 of 94

+A/D_DOCK_IN	+A/D_DOCK_IN	60,88
+BAT_CON	+BAT_CON	60,88
+AC_BAT_SYS	+AC_BAT_SYS	45,80,81,82,83,86,87,88
+5VA	+5VA	64,81
+3VA	+3VA	24,28,30,31,36,53,57,67,81,88
+5VO	+5VO	81,82,83,84,85,86,88,91
+3VO	+3VO	70,74,81,84,85,90,91
+1.8VO	+1.8VO	84,91
+1.8VO_VGA	+1.8VO_VGA	90
+1.35VO_VGA	+1.35VO_VGA	86
+1.2VO	+1.2VO	83
+1.0VO	+1.0VO	82,91
+1.0VO_VGA	+1.0VO_VGA	85
+0.6VO	+0.6VO	83
+12VSUS	+12VSUS	28,49,81,91
+5VSUS	+5VSUS	41,52,64,81
+3VSUS	+3VSUS	4,20,21,22,23,24,25,26,28,30,31,41,42,51,53,62,74,81,92
+1.8VSUS	+1.8VSUS	9,24,26,84
+1.0VSUS	+1.0VSUS	26,82
+12V	+12V	57,91
+3V	+3V	25,31,45,57,91
+1.2V	+1.2V	4,7,15,16,17,19,57,83
+1.0V	+1.0V	3,5,7,9,25,32,57,91
+12VS	+12VS	28,31,57,91
+5VS	+5VS	31,36,45,48,50,51,57,69,80,87,91
+3VS	+3VS	3,4,20,21,22,23,24,28,30,31,32,36,41,44,45,48,49,50,51,53,54,57,62,64,74,87,91,92
+1.8VS	+1.8VS	21,36,49,57,91
+0.6VS	+0.6VS	15,57,83
+VCCPRIM_CORE	+VCCPRIM_CORE	26,82
+VCCIO	+VCCIO	3,5,7,9,57,91
+VCCSA	+VCCSA	7,80
+VCCGT	+VCCGT	6,80
+VCORE	+VCORE	5,6,80
+3V3_MAIN	+3V3_MAIN	57,74,85,91
+1V8_AON	+1V8_AON	57,70,72,74,75,87,90,91
+1V8_MAIN	+1V8_MAIN	57,70,71,72,74,75,91
+FBVDDQ	+FBVDDQ	57,71,75,76,77,86
+PEX_VDD	+PEX_VDD	57,70,71,72,85
+NVVDD	+NVVDD	57,75,87

FOR POWER TEST

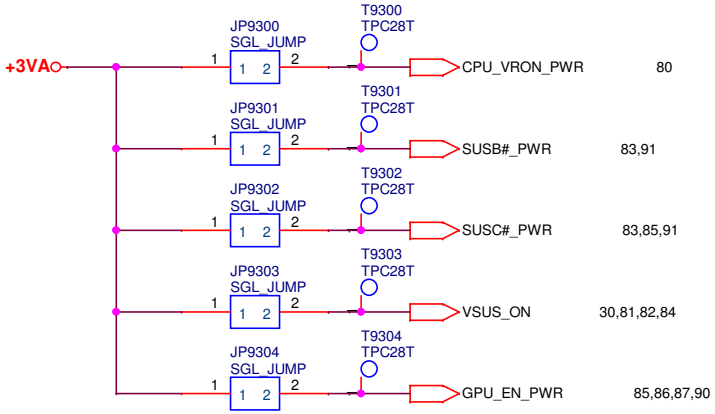

BATTERY IN DETECT

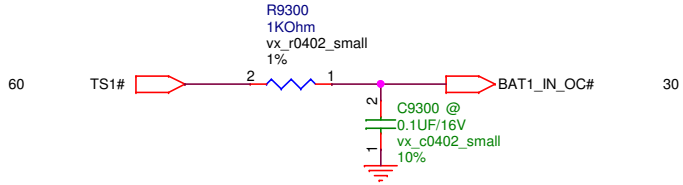

<Variant Name>

PEGATRON
PEGATRON PROPRIETARY AND CONFIDENTIAL

Title : POWER_SIGNAL

Engineer: Simon Liao

Size	Project Name	Rev
Custom	BE5EA	1.1

Date: Thursday, May 11, 2017 Sheet 93 of 94

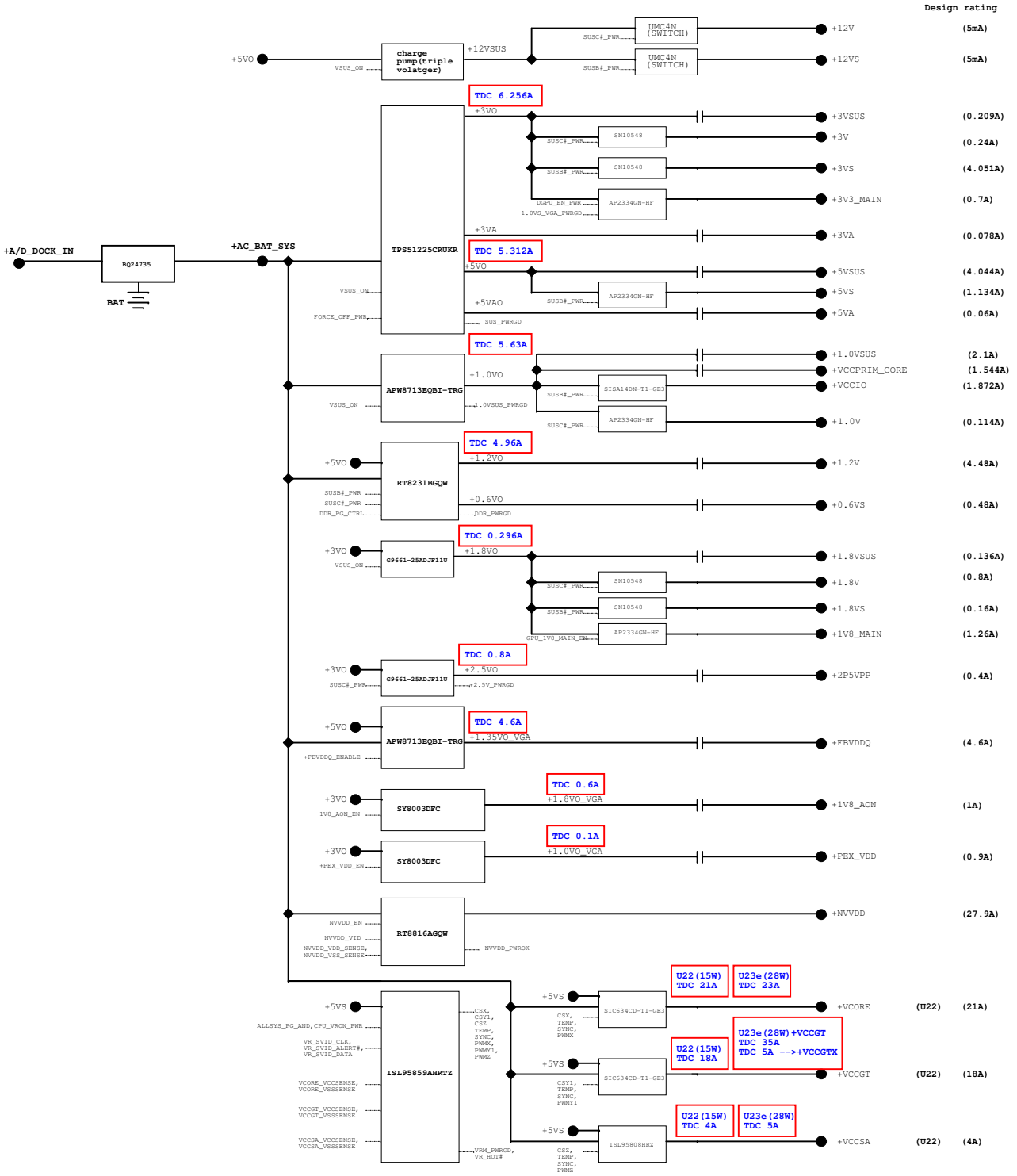
Design rating
+A/D_DOCK_IN
BQ24735
BAT
+AC_BAT_SYS
+5VO
VSUS_ON
charge pump(triple volatger)
+12VSUS
SUSC#_PWR
UMC4N (SWITCH)
SUSB#_PWR
UMC4N (SWITCH)
+12V (5mA)
+12VS (5mA)
TPS51225CRUKR
TDC 6.256A
+3VO
SN10548
AP2334GN-HF
DGPU_EN_PWR
1.0VS_VGA_PWRGD
+3VSUS (0.209A)
+3V (0.24A)
+3VS (4.051A)
+3V3_MAIN (0.7A)
+3VA
+3VA (0.078A)
TDC 5.312A
+5VO
+5VSUS (4.044A)
+5VS (1.134A)
+5VAO
FORCE_OFF_PWR
SUS_PWRGD
+5VA (0.06A)
APW8713EQBI-TRG
TDC 5.63A
+1.0VO
SISA14DN-T1-GE3
1.0VSUS_PWRGD
+1.0VSUS (2.1A)
+VCCPRIM_CORE (1.544A)
+VCCIO (1.872A)
+1.0V (0.114A)
RT8231BGQW
TDC 4.96A
+1.2VO
SUSB#_PWR
SUSC#_PWR
DDR_PG_CTRL
DDR_PWRGD
+1.2V (4.48A)
+0.6VO
+0.6VS (0.48A)
G9661-25ADJF11U
TDC 0.296A
+1.8VO
+1.8VSUS (0.136A)
+1.8V (0.8A)
+1.8VS (0.16A)
GPU_1V8_MAIN_EN
+1V8_MAIN (1.26A)
TDC 0.8A
+2.5VO
+2.5V_PWRGD
+2P5VPP (0.4A)
TDC 4.6A
+1.35VO_VGA
+FBVDDQ_ENABLE
+FBVDDQ (4.6A)
SY8003DFC
TDC 0.6A
+1.8VO_VGA
1V8_AON_EN
+1V8_AON (1A)
TDC 0.1A
+1.0VO_VGA
+PEX_VDD_EN
+PEX_VDD (0.9A)
RT8816AGQW
NVVDD_EN
NVVDD_VID
NVVDD_VDD_SENSE,
NVVDD_VSS_SENSE
NVVDD_PWROK
+NVVDD (27.9A)
ISL95859AHRTZ
ALLSYS_PG_AND,CPU_VRON_PWR
VR_SVID_CLK,
VR_SVID_ALERT#,
VR_SVID_DATA
VCORE_VCCSENSE,
VCORE_VSSSENSE
VCCGT_VCCSENSE,
VCCGT_VSSSENSE
VCCSA_VCCSENSE,
VCCSA_VSSSENSE
CSX,
CSY1,
CSZ
TEMP,
SYNC,
PWMX,
PWMY1,
PWMZ
VRM_PWRGD,
VR_HOT#
SIC634CD-T1-GE3
ISL95808HRZ
CSX,
TEMP,
SYNC,
PWMX
CSY1,
TEMP,
SYNC,
PWMY1
CSZ,
TEMP,
SYNC,
PWMZ
U22(15W)
TDC 21A
U23e(28W)
TDC 23A
+VCORE (U22) (21A)
U22(15W)
TDC 18A
U23e(28W)+VCCGT
TDC 35A
TDC 5A -->+VCCGTX
+VCCGT (U22) (18A)
U22(15W)
TDC 4A
U23e(28W)
TDC 5A
+VCCSA (U22) (4A)